INSTRUCTION MANUAL

S0600/S0605

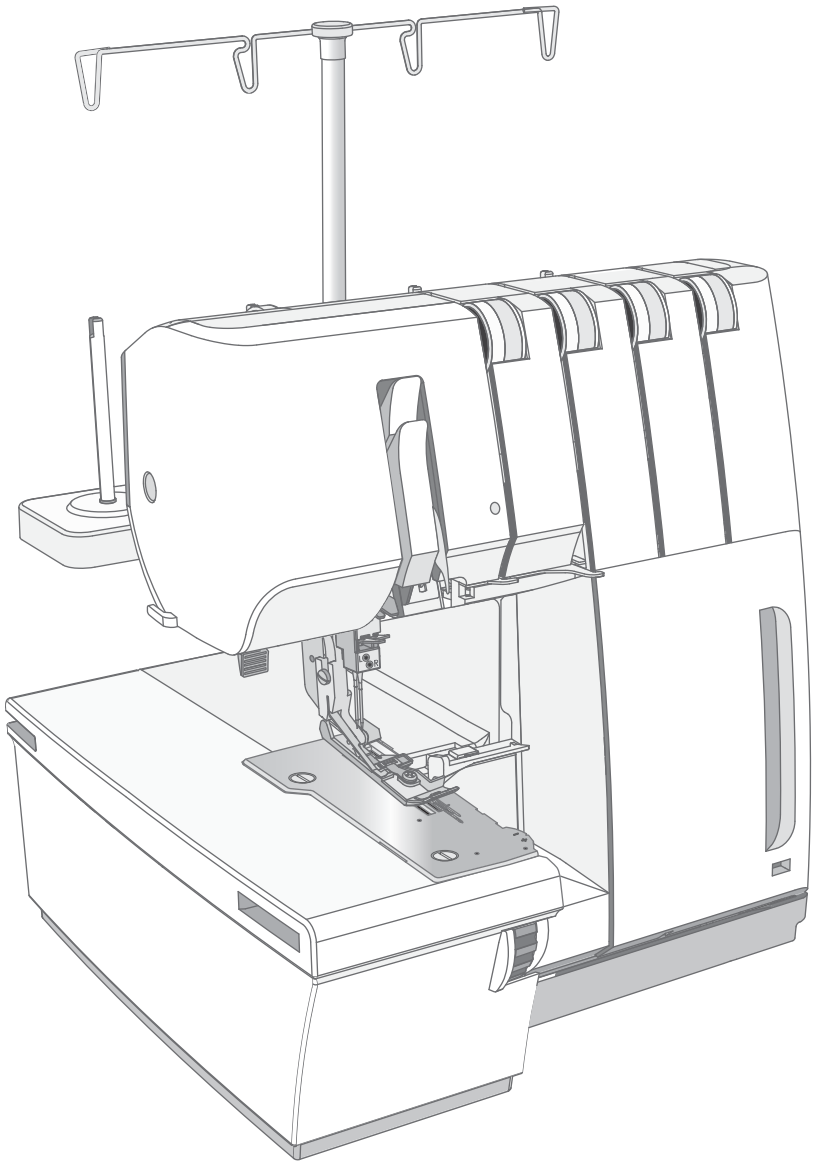

SINGER®

www.singermachines.co.uk

For Household Sewing Machines and Overlock Machines

IMPORTANT SAFETY INSTRUCTIONS

Read all instructions before using this sewing machine.

When using an electrical appliance, basic safety precautions should always be followed, including the following:

Keep the instructions at a suitable place close to the machine. Make sure to hand them over if the machine is given to a third party.

This appliance is intended for use by adults. The appliance can be used with adult supervision by (i) children aged from 8 to 12 years and (ii) persons with reduced physical, sensory or mental capabilities or lack of experience and knowledge if they have been given instruction concerning use of the appliance in a safe way and understand the hazards involved. Cleaning and user maintenance shall not be made by children without supervision. It is not allowed for anyone to play with the machine. Children up to 8 years are not allowed to use the machine.

DANGER - TO REDUCE THE RISK OF ELECTRIC SHOCK:

- A sewing machine should never be left unattended when plugged in. The electrical socket, to which the machine is plugged in should be easily accessible. Always unplug this sewing machine from the electric outlet immediately after using and before cleaning, removing covers, lubricating or when making any other user servicing adjustments mentioned in the instruction manual.

WARNING –TO REDUCE THE RISK OF BURNS, FIRE, ELECTRIC SHOCK, OR INJURY TO PERSON:

- Do not allow to be used as a toy. Close attention is necessary when this sewing machine is used by or near children.
- Use this sewing machine only for its intended use as described in this manual. Use only attachments recommended by the manufacturer as contained in this manual.
- Never operate this sewing machine if it has a damaged cord or plug, if it is not working properly, if it has been dropped or damaged, or dropped into water. Return the sewing machine to the nearest authorized dealer or service center for examination, repair, electrical or mechanical adjustment.
- Never operate the sewing machine with any air openings blocked. Keep ventilation openings of the sewing machine and foot control free from the accumulation of lint, dust, and loose cloth.
- Keep fingers away from all moving parts. Special care is required around the sewing machine needle.
- Always use the proper needle plate. The wrong plate can cause the needle to break.
- Do not use bent needles.
- Do not pull or push fabric while stitching. It may deflect the needle causing it to break.
- Wear safety glasses.
- Switch the sewing machine off (“0”) when making any adjustment in the needle area, such as threading needle, changing needle, threading bobbin, or changing presser foot, etc.
- Never drop or insert any object into any opening.
- Do not use outdoors.
- Do not operate where aerosol (spray) products are being used or where oxygen is being administrated.
- To disconnect, turn all controls to the off (“0”) position, then remove plug from outlet.
- Do not unplug by pulling on cord. To unplug, grasp the plug, not the cord.
- The foot control is used to operate the machine. Never place other objects on the foot control.
- Do not use the machine if it is wet.
- If the LED lamp is damaged or broken, it must be replaced by the manufacturer or its service agent or a similarly qualified person, in order to avoid a hazard.
- If the cord connected with the foot control is damaged, it must be replaced by the manufacturer or its service agent or a similarly qualified person, in order to avoid a hazard.
- Only use the external power supply (if applicable), the foot controller and cords supplied with your machine. No other can be used. If damaged or lost, make sure to replace with identical parts. Replacement should be carried out by the manufacturer, its service agent or a similarly qualified person, to ensure safety and avoid a hazard.

For Overlock Machines only:

- Never operate without a cutter cover or a securely installed coverstitch table.

- **CAUTION** — Your machine has moving parts, to reduce the risk of injury, switch off before doing service or maintenance. Close the cover before operating the machine.

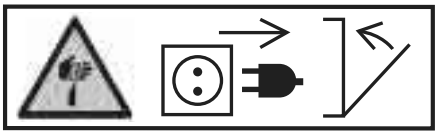

SAVE THESE INSTRUCTIONS

Federal Communication Commission Interference Statement

For the USA and Canada

Responsible party:	
	300 2nd Ave. S, Suite 300, Nashville, TN 37201, USA
Product name:	SINGER® S0600/S0605 household sewing machine

This device complies with Part 15 of the FCC Rules. Operation is subject to the following two conditions: (1) This device may not cause harmful interference, and (2) this device must accept any interference received, including interference that may cause undesired operation.

To satisfy radio frequency exposure requirements, a separation distance of 8" (20 cm) or more should be maintained between this device and persons during device operation. To ensure compliance, operations at closer than this distance is not recommended. The built-in antenna used for this transmitter must not be co-located in conjunction with any other antenna or transmitter.

This equipment has been tested and found to comply with the limits for a Class B digital device, pursuant to Part 15 of the FCC Rules. These limits are designed to provide reasonable protection against harmful interference in a residential installation. This equipment generates, uses and can radiate radio frequency energy and, if not installed and used in accordance with the instructions, may cause harmful interference to radio communications. However, there is no guarantee that interference will not occur in a particular installation. If this equipment does cause harmful interference to radio or television reception, which can be determined by turning the equipment off and on, the user is encouraged to try to correct the interference by one of the following measures:

- Reorient or relocate the receiving antenna.
- Increase the separation between the equipment and receiver.
- Connect the equipment into an outlet on a circuit different from that to which the receiver is connected.
- Consult the authorized SINGER® retailer or an experienced radio/TV technician for help.

The included interface cable should be used in order to ensure compliance with the limits for a Class B digital device.

⚠ *Any changes or modifications not expressly approved by the party responsible for compliance could void the user's authority to operate this equipment.*

TABLE OF CONTENTS

INTRODUCTION 1
Machine Overview 1
- Front and Side of Machine 1
- Inside of Machine 2
- Back of Machine 2
- Needle Area 3

Accessories 3
- Accessories Stored in the Front Cover 3
- Other Accessories 3

PREPARATION 4
Unpack the Machine 4
- Connect the Foot Control Cord 4

Connect the Foot Control and the Power Supply 4
Telescopic Thread Stand 5
Waste Tray 5
Open and Close the Front Cover 5
Open and Close the Flat Bed Extension 6
Seam Guide 6
Presser Foot Lifter 6
Change the Presser Foot 6
Needle Information 7
- Checking the Needles 7

Change the Needles 7
Upper Cutter Position 9
Upper Looper Converter 9
Handwheel and Threading Position 9
Thread Tension Fine Tuning Dials 10
Stitch Finger 10
- Precise Thread Control 10

Safety Indicator LED 11
- Standby Mode 11

THREADING 12
General Threading Information 12
What Needle and Thread to Use with Different Fabrics 12
Placing the Thread Spools on the Spool Pins 13
Changing Thread 13
Threading the Upper Looper 14
Threading the Lower Looper 15
Threading the Right Needle 16
Threading the Left Needle 17
Needle Threader 18

STITCHES AND SEWING TECHNIQUES 19
Stitch Overview 19
- Icon Explanation 19
- 4–Thread Overlock 19
- 3–Thread Stretch Overlock 19
- 3–Thread Overlock, Wide (and Narrow) 20
- 3–Thread Narrow Edge 20
- 3–Thread Flatlock, Wide (and Narrow) 20
- 3–Thread Rolled Edge 21
- 3–Thread Picot Edge 21
- 2–Thread Overlock, Wide (and Narrow) 21
- 2–Thread Wrapped Overlock, Wide (and Narrow) 22
- 2–Thread Rolled Edge 22
- 2–Thread Flatlock Wide (and Narrow) 22

Start Sewing 23
- Securing Thread Chain 23

Cutting the Seams Open 25
Corded Seams 25
Gathering with Differential Feed 26
Sewing Corners 26
Sewing Heavy Weight Fabric 27
Sewing with Decorative Thread in the Loopers 27
Rolled Edge Sewing 28
- 2–Thread Rolled Edge (A) 28
- 3–Thread Rolled Edge (B) / Narrow Edge (C) 28

Flatlock Sewing 29
- Standard Flatlock, Wide (B) 29
- Decorative Flatlock, Wide (C) 29
- Ladder Stitch (D) 29

STITCH ADJUSTMENTS 30
Presser Foot Pressure 30
Stitch Width 30
- Adjustment Using Needle Position 30
- Adjustment Using Cutting Width Dial 30
- Adjustment Using the Precise Thread Control 31

Stitch Length 31
Differential Feed 32
Thread Tension Settings 33
- Correct Tension 33
- Upper Looper Tension 33
- Lower Looper Tension 33
- Left Needle Tension 33
- Right Needle Tension 33

MAINTENANCE 34
Cleaning 34
Oiling 34
Replacing the Upper Cutter 35
Storage 35
Servicing 35
Trouble Shooting 35
Technical Specification 38

INTRODUCTION

Machine Overview

Front and Side of Machine

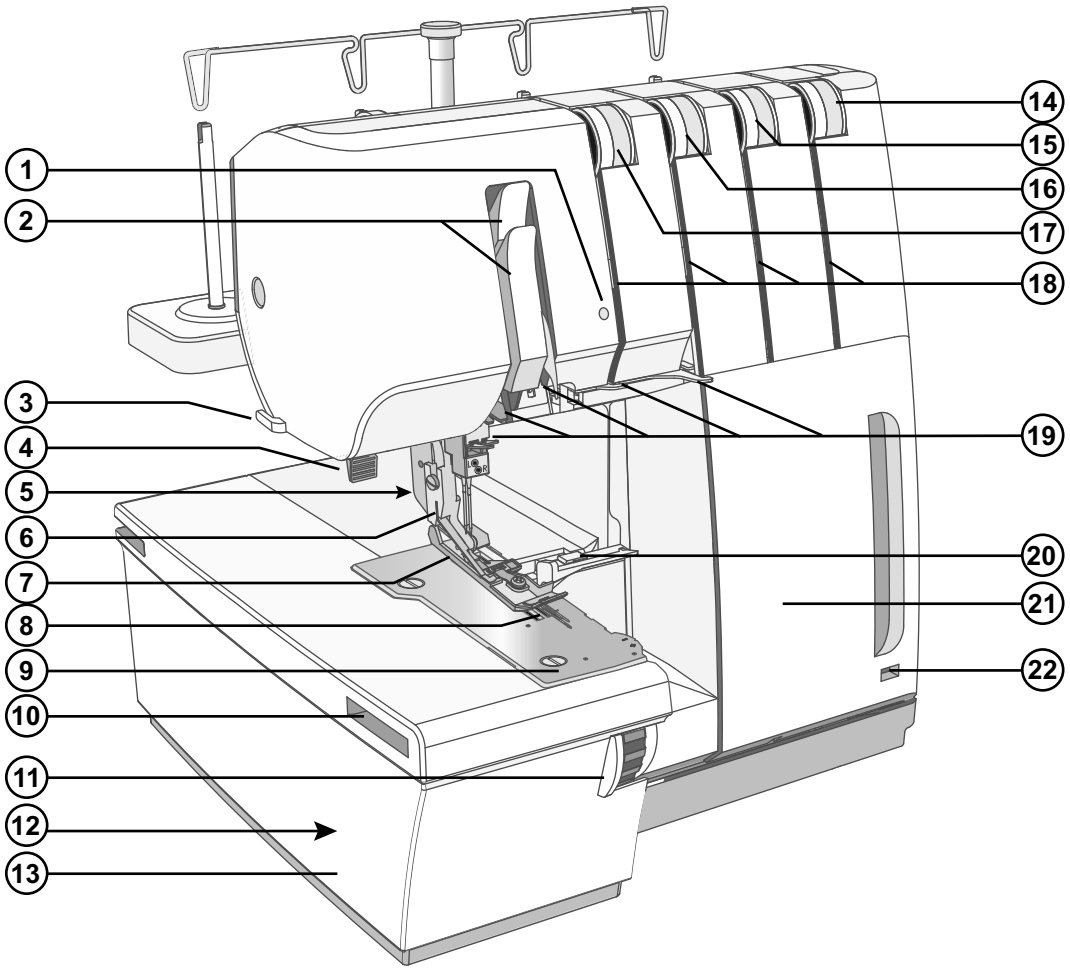

1. Safety indication light
2. Threading paths
3. Thread knife
4. Presser foot lifter
5. Presser foot release button
6. Presser foot ankle
7. Presser foot
8. Feed teeth
9. Needle plate
10. Slots for attaching the extension table (optional accessory)
11. Cutting width dial
12. Upper Cutter position knob (found behind the flat bed extension)
13. Flat bed extension
14. Lower looper thread tension dial (green)
15. Upper looper thread tension dial (red)
16. Right needle thread tension dial (blue)
17. Left needle thread tension dial (orange)
18. Threading slots
19. Thread guides
20. Cutting width indicator
21. Front cover
22. Slot to attach the waste tray

Inside of Machine

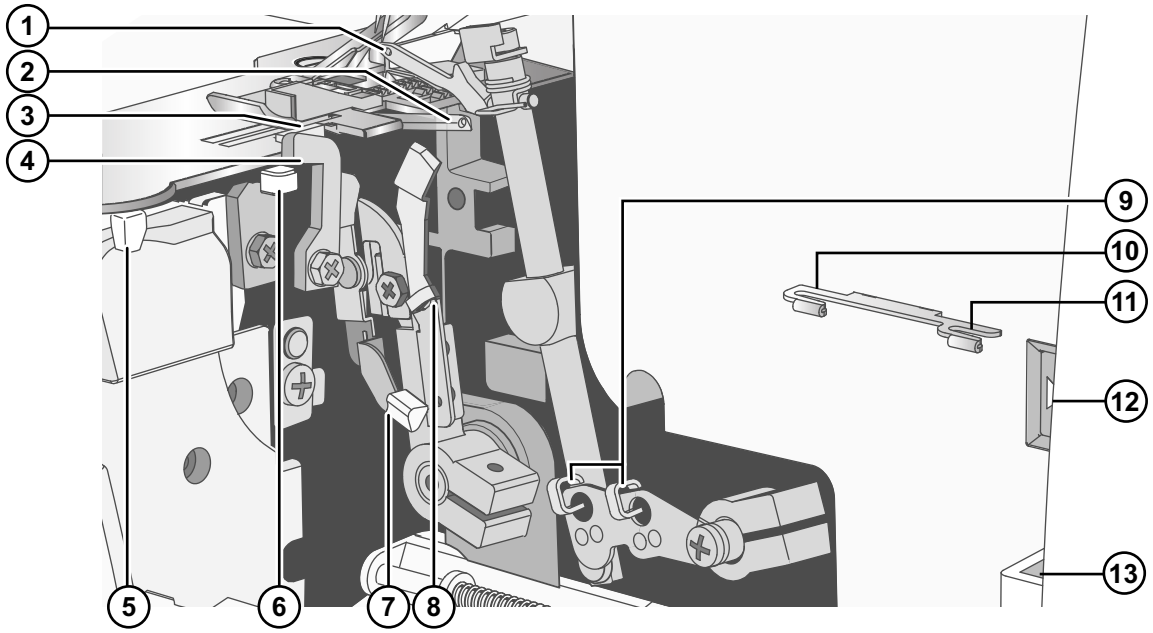

1. Upper looper
2. Lower looper
3. Stationary cutter
4. Upper cutter
5. Precise Thread Control lever
6. Stitch finger lever
7. Lower looper threader
8. Lower looper thread guide
9. Upper/lower looper thread guides
10. Upper looper thread guide
11. Lower looper thread guide
12. Threading position indicator
13. Pincushion

Back of Machine

1. Pretension thread guides – lower, upper and needle thread guides
2. Stitch length dial
3. Differential feed dial
4. Handwheel
5. Power switch
6. Foot control socket
7. Power cord socket
8. Telescopic thread stand
9. Presser foot pressure adjustment dial
10. Handle
11. Spool stand and spool pins
12. Cone holders

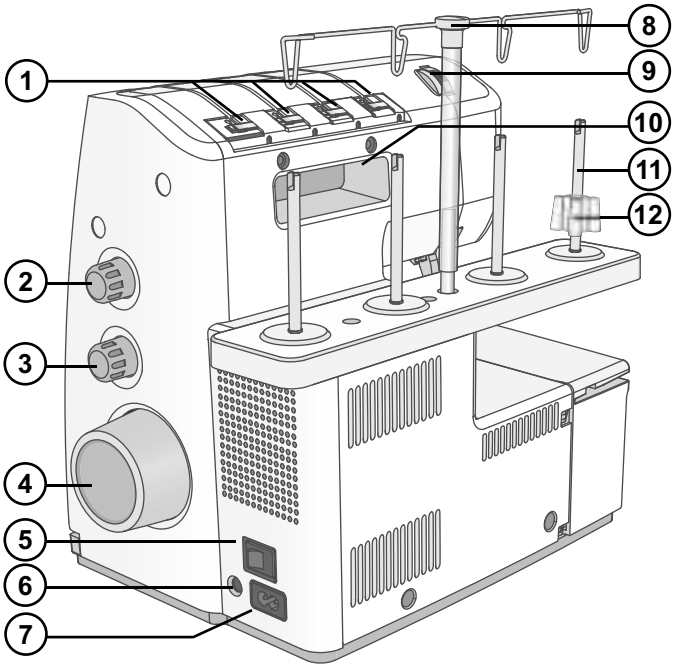

Needle Area

1. Needle thread guide
2. Left Needle
3. Right Needle

Note: When using two needles, the left needle is positioned a little higher up than the right needle (they are not supposed to be level).

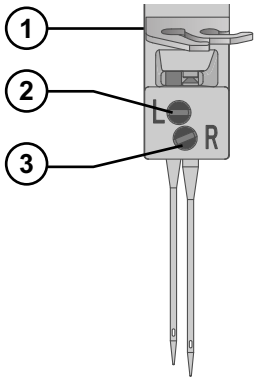

Accessories

Accessories Stored in the Front Cover

1. Needle pack
2. Allen key
3. Brush
4. Tweezers
5. Upper looper converter
6. Needle threader

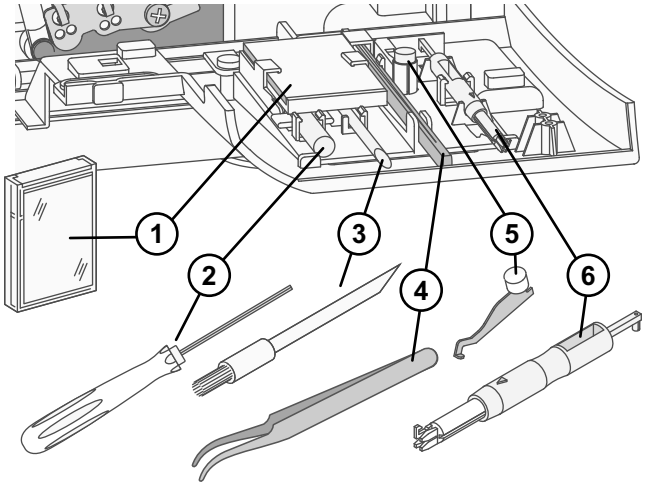

Other Accessories

1. Cone holders x 4
2. Wrench
3. Seam guide
4. Spool cap x 4
5. Thread nets x 4
6. Knife blade for upper cutter
7. Oil
8. Screw driver
9. Accessory box (not pictured)
10. Foot control (not pictured)
11. Waste tray (not pictured)
12. Soft dust cover (not pictured)

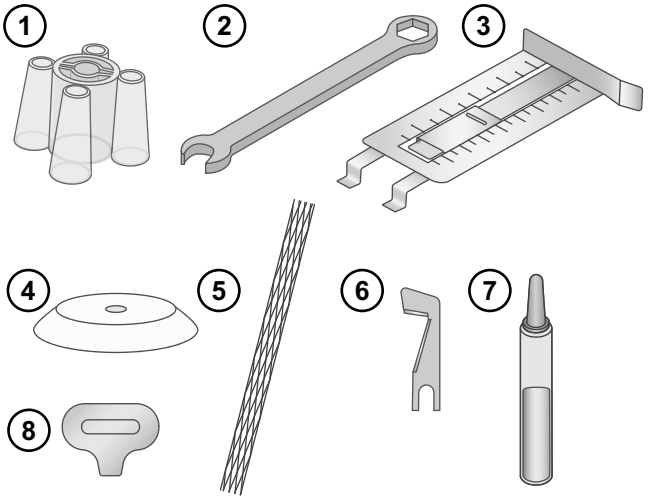

PREPARATION

Unpack the Machine

After lifting the machine out of the box and removing all packing material, wipe the machine, particularly around the needle and needle plate to remove any oil before sewing.

Note: Your HUSQVARNA® VIKING® machine is adjusted to provide the best stitch result at normal room temperature. Extreme hot and cold temperatures can affect the sewn results.

Connect the Foot Control Cord

Among the accessories you will find the foot control and foot control cord. Connecting the foot control cord to the foot control is only necessary the very first time you are going to use the machine.

1. Turn the foot control over. Connect the cord to the socket inside the space of the foot control. Push firmly to make sure it is properly connected.
2. Lay the cord in the slot on the underside of the foot control.

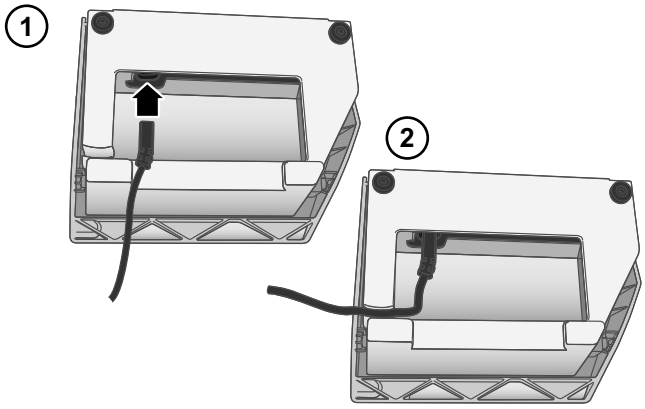

Connect the Foot Control and the Power Supply

Among the accessories you will find the power cord.

Note: Consult a qualified electrician if you are in doubt about how to connect the machine to the power source. Unplug the power cord when the machine is not in use.

Note: Before plugging in the foot control, check to ensure that it is type "FR2" (see underside of foot control).

Before plugging your machine in, make sure the voltage is the same as indicated on the plate under the machine. Specifications vary from country to country.

- Mount the foot control cord in the foot control as described above. Connect the foot control cord (A) to the socket (1) at the bottom right side of the machine.
- Connect the cord (B) to the power cord socket (2) at the bottom right side of the machine. Plug the power cord into the wall socket.
- Press the ON/OFF switch (3) to "I" to turn on power and light.

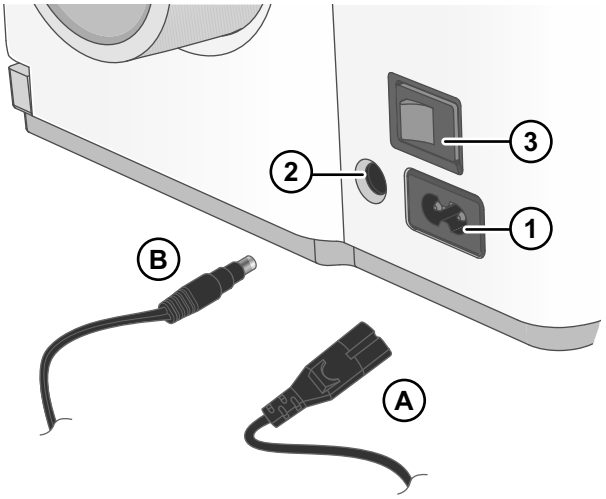

Press the foot control to start sewing. Use the foot control to adjust the sewing speed. The harder you press, the faster the machine will sew. To stop the machine from sewing, remove your foot from the control.

Push the power switch to "O" to turn off the machine.

Note: When the front cover is open the safety switch is activated and prevents the machine from sewing, even if the foot control is pressed.

Telescopic Thread Stand

Extend the telescopic thread stand to its full height, then turn slightly until it clicks into place.

Place the thread spools or cones over the cone holders on the spool pin.

If the machine is already threaded, straighten the threads to prevent tangling.

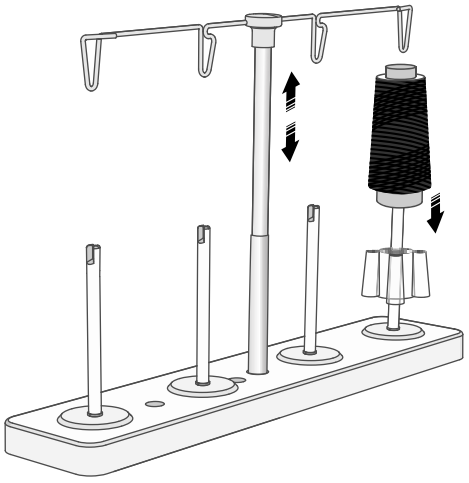

Waste Tray

The waste tray collects trimmings. Make sure the trim falls into the tray while sewing. Empty the tray after sewing.

Place the tray along the edge of the front cover. Push the waste tray towards the front cover inserting the tabs on the tray into the slits on the front cover. Push until it clicks in place.

Remove the Waste Tray

Push the waste tray slightly upwards, then tilt it to release the tabs of the tray from the slits on the cover. Pull the waste tray toward you to remove it.

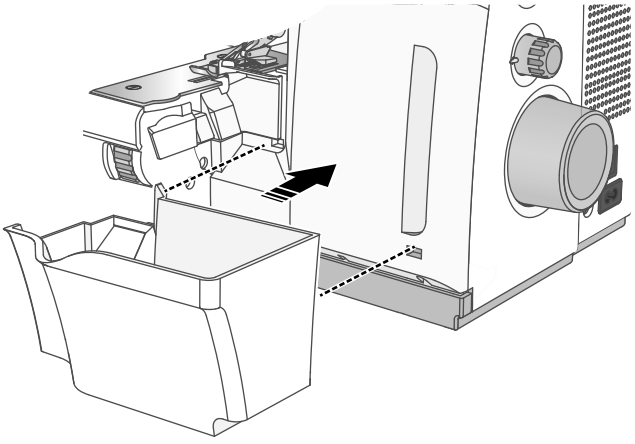

Open and Close the Front Cover

Open the Front Cover

First push the cover to the right as far as it will go and then pull it downward toward you.

Close the Front Cover

First pull the cover upward and then slide it to the left until it locks.

Note: The front cover has a safety switch and the machine will not sew if the front cover is open.

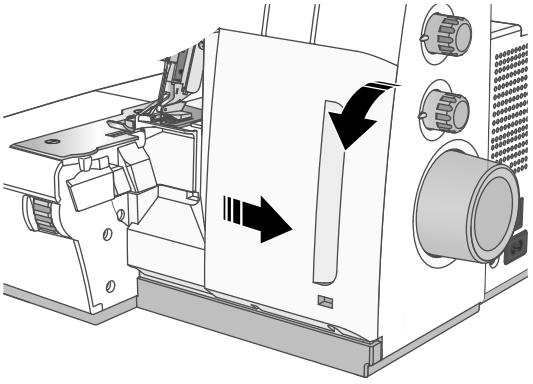

Open and Close the Flat Bed Extension

Open the Flat Bed Extension

To open the flat bed extension, hold the cover next to the cutting width dial. Push the cover to the left to open it.

Close the Flat Bed Extension

Swing the cover back to the right until it clicks in place to close it again.

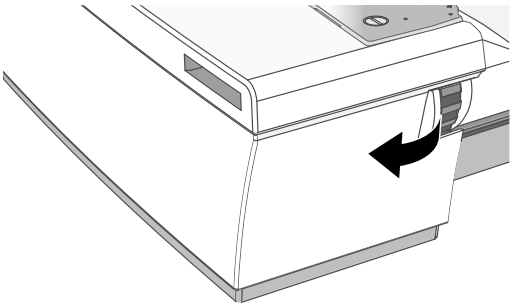

Seam Guide

The seam guide is used to get an even cutting distance from the raw edge of the fabric.

Attach the Seam Guide

To mount the seam guide, open the flat bed extension. Place the hooks (A) on the right underside of the seam guide around the notches (B) on the needle plate and push the seam guide down.

Close the flat bed extension. Slide the guide to the left/ right to adjust the distance. The guide has both inch and mm marks.

Note: The cutout in the seam guide indicate the position of the left needle.

Remove the Seam Guide

To remove the seam guide, open the flat bed extension and lift off the seam guide.

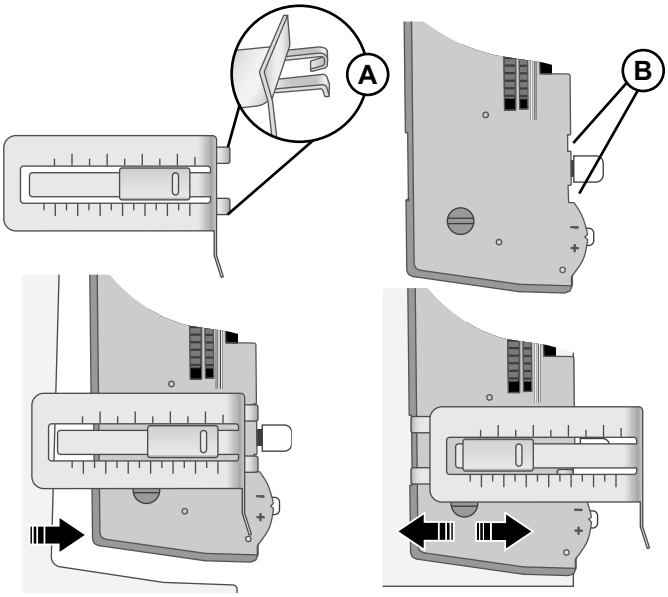

Presser Foot Lifter

Raise and lower the presser foot with the presser foot lifter positioned behind the presser foot.

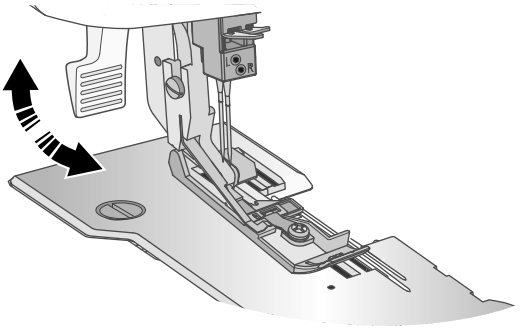

Change the Presser Foot

⚠ *Turn off the main power switch and unplug the machine.*

1. Raise the presser foot.
2. Turn the handwheel toward you until the needles are in the highest position.
3. Push the button on the back of the presser foot ankle (A), and the foot will come off.
4. Place the new foot with the pin (B) right underneath the groove of the ankle (C) and lower the presser foot. Push the button at the back of the presser foot ankle (A) and the foot will snap into place.

Note: Optional feet are not included.

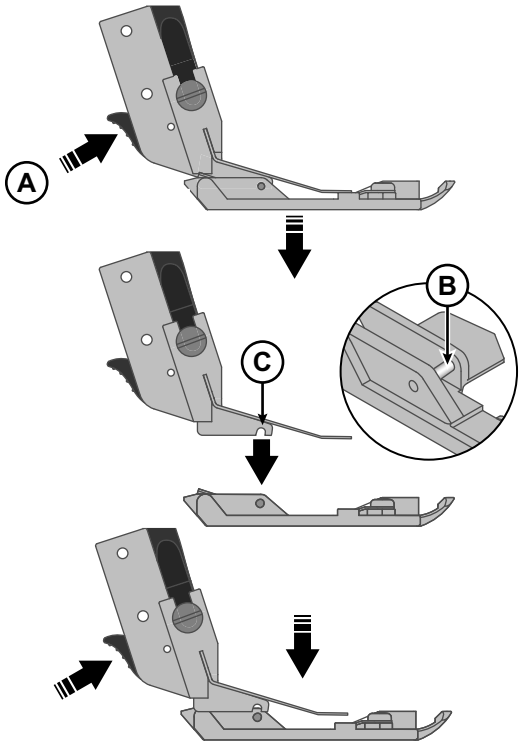

Needle Information

This overlock uses a flat shank industrial needle that eliminates the possibility of inserting the needle backwards.

Do not attempt to use a standard household sewing machine needle of any size or type in this overlock.

Use SINGER® needles EL x 705 sizes 14/90 and 12/80, supplied with this machine.

You can sew using one or two needles depending on what stitch to use.

Note: When using two needles, the left needle is positioned a little higher up than the right needle (they are not supposed to be 'level', like a twin needle).

Checking the Needles

To make sure the needle is not bent, place the flat side of the needle onto something flat (needle plate, glass etc.). The gap between the needle and the flat surface should be consistent. Never use a bent or blunt needle.

Change the Needles

⚠ *Turn off the main power switch and unplug the machine.*

Change the needle often. As a general rule, needles should be changed every 6-8 hours of actual stitching time.

1. Turn the handwheel toward you until the needles are at the highest position.

   Loosen, but do not remove the needle clamp screw (s) with the allen key while you are holding the needle (s).

   Remove the selected needle.

2. Hold the new needle with the flat surface to the back.

   Insert the needle into the needle clamp as far as it will go.

   Note: We recommend using the hole in the needle threader to hold the needle.

   Securely tighten the needle clamp screw using the allen key.

Note: Do not over-tighten the screw as this may cause the needle clamp to be damaged.

Note: When using only one needle, slightly tighten the other needle clamp screws. This is to prevent losing the needle clamp screw.

Note: When using both needles, the left needle is positioned a little higher up than the right needle (they are not supposed to be 'level', like a twin needle).

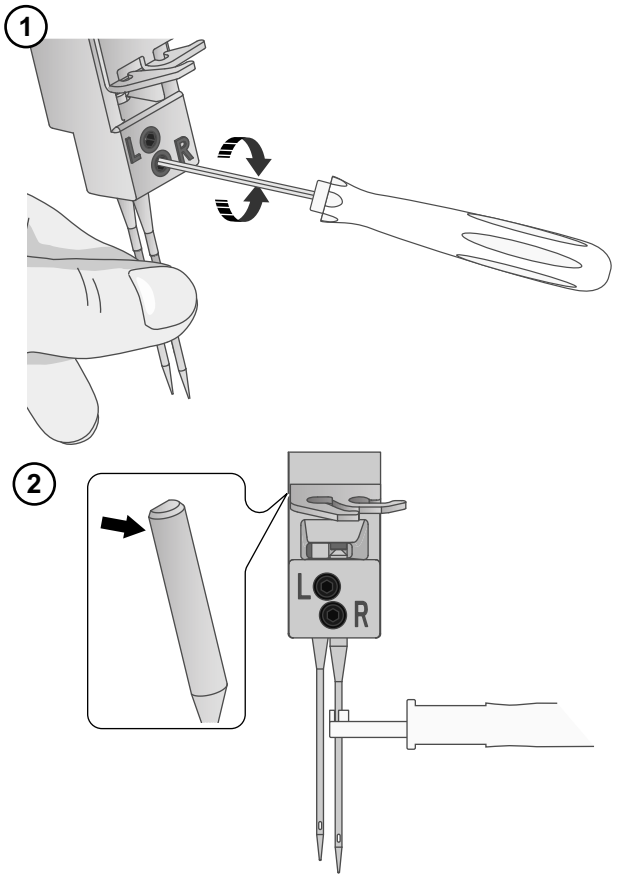

Upper Cutter Position

⚠ *Turn off the main power switch and unplug the machine.*

Note: Always have the upper cutter in the cutting position when sewing, because this machine must trim off any excess fabric to form the stitch over the fabric edge. An exception to this is when sewing decorative flatlock seams. Then the upper cutter needs to be turned off.

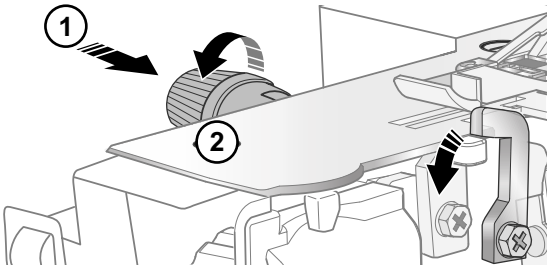

Open the front cover and the flat bed extension.

Deactivate the upper cutter by pressing the knob to the right and turn it towards you. The upper cutter will then turn to an inactive position.

To activate the upper cutter, press the knob to the right and turn the knob away from you, until the cutter clicks into the cutting position.

Upper Looper Converter

When sewing 2–thread stitches or the 3–thread super stretch stitch, only the lower looper is threaded. When attached, the upper looper converter catches the lower looper thread and guides it to the correct position in relation to the needle(s).

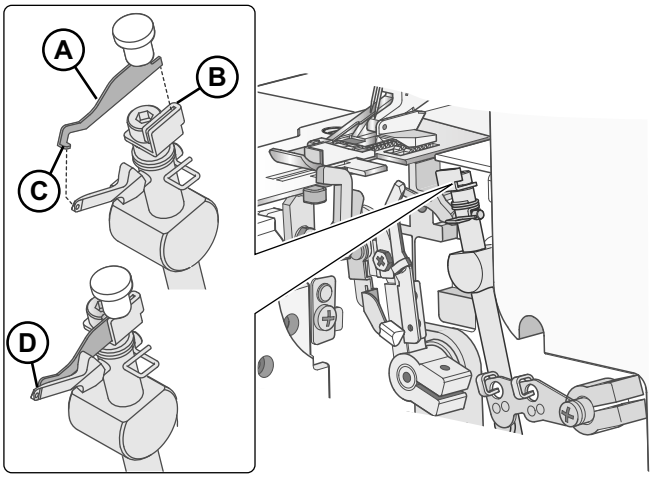

Attach the Upper Looper Converter

Open the front cover. Set the machine in threading position (see page 9).

Insert the converter (A) into the slit of the upper looper (B). Push the converter to the right as far as it will go. The notch on the converter should be visible outside the slot on the upper looper.

Push the tip of the converter backwards carefully, and insert the pointed edge (C) of the converter from behind into the eye (D) of the upper looper.

Remove the Upper Looper Converter

Carefully push the tip of the 2–thread converter backwards and remove the pointed edge from the eye of the upper looper. Remove the converter by pulling it to the left and upwards.

Handwheel and Threading Position

The handwheel is turned towards you, and is used to move the needles and loopers up and down.

To thread your machine, the needles and loopers should be put in threading position. Open the front cover to find the threading position indicator. Turn the handwheel to set your machine in threading position. The correct threading position is set when the black arrow is aligned with the red line.

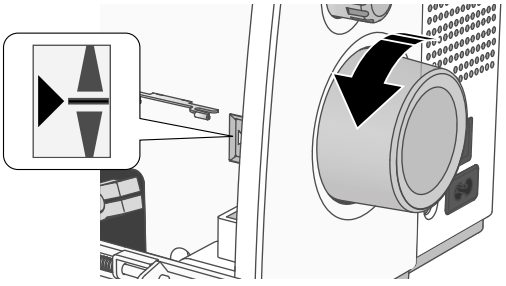

Thread Tension Fine Tuning Dials

Thread tension recommendations are given for each stitch but it may have to be fine tuned depending on:

- Type and thickness of the fabric
- Needle size
- Size, type and fiber content of the thread

The tension can be adjusted individually for each thread. For best results, make tension adjustments in small increments. Move the tension dial towards "+" to increase the tension, and towards "-" to decrease the tension. Always test sew on a sample of your fabric before sewing on your project. Find more information on how to adjust thread tension on page 33.

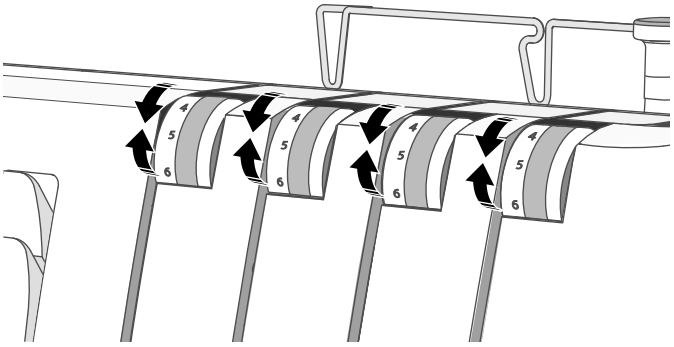

Stitch Finger

The stitch finger (A) is used to stabilize the fabric edge when forming stitches. The stitch finger should be active for all standard overlock sewing (1). To sew rolled edge you need to retract the stitch finger. To do that move the stitch finger lever towards you (2).

When moving the stitch finger lever, be sure to push the lever as far as it will go in each direction.

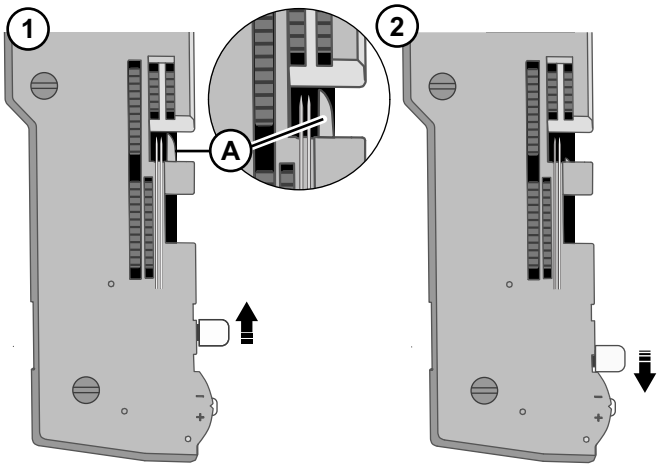

Precise Thread Control

Depending on the stitch, fabric and thread that is being used, thread loops may either extend beyond the fabric edge, or form too tightly around the fabric edge. If thread tension (page 10 or page 33) and the cutting width adjustment (page 30) are not quite enough, the Precise Thread Control (PTC) gives you the possibility to do further adjustment. The Precise Thread Control will allow very small movements of the stitch finger to compensate, so that the thread loops form neatly around the fabric edge.

Move the Precise Thread Control lever towards "–" (A) to decrease the width of the loops. Move the lever towards "+" (B) to increase the width of the loops.

Tip: Read more about stitch adjustments and PTC, page 31.

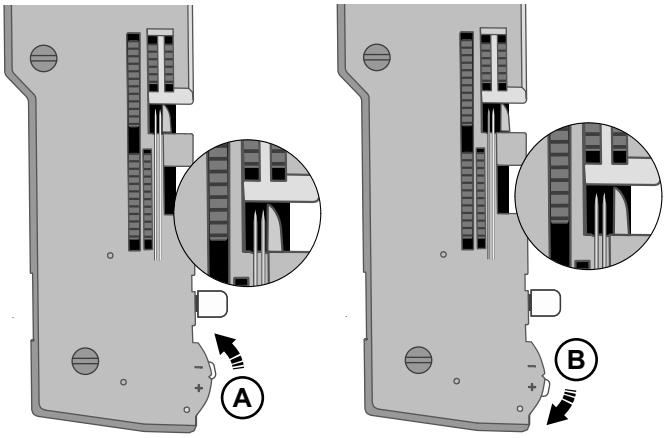

Safety Indicator LED

When the safety indicator (A) is lit, the machine will not sew.

Possible Cause

- The front cover is open
- The flat bed extension is open
- The presser foot is raised
- The motor is overloaded
- The machine is in standby mode

Before starting to sew, make sure the front and flat bed covers are closed and the presser foot is lowered. If you suspect that the motor is overloaded, turn your machine off for 10–15 minutes.

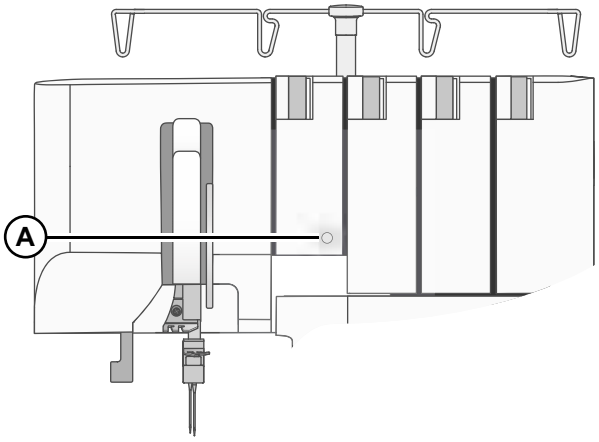

Standby Mode

The machine will enter standby mode after being idle for approximately 20 minutes without any operation. When it enters standby mode, the LED light will be turned off and the safety indicator light will blink. To restart the machine, press the foot control, move the presser foot lifter or open any of the covers.

THREADING

General Threading Information

A color coded diagram is located inside the front cover for quick reference (see illustration to the right). Always start threading the loopers and then the needles from right to left (follow the order listed below).

1. Upper looper - Red
2. Lower looper - Green
3. Right needle - Blue
4. Left needle - Orange

Note: Always raise the presser foot and set the machine in threading position before threading.

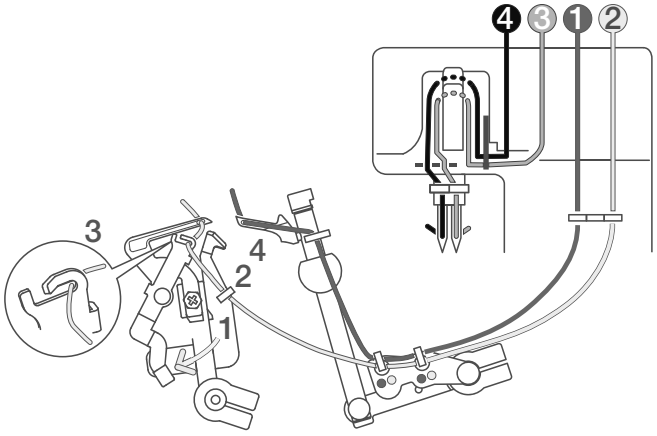

Important:

If the threads break during sewing, re-thread all thread paths in the order listed below.

1. Unthread the needle(s)

2. Unthread upper and lower looper

3. Thread the upper looper

4. Thread the lower looper

5. Thread the needle(s) from right to left

See the table below for recommendations on what needles and thread to use for different fabric weights.

Tip: Your new machine is threaded to sew a 4-thread overlock. Tie your own threads to these threads and carefully pull them through the machine, to easily thread your new overlock machine the first time (see page 13).

What Needle and Thread to Use with Different Fabrics

Light Fabric (voile, crepe, georgette, etc.)	*Medium Fabric* (cotton, chino, wool, satin, etc.)	*Heavy Fabric* (denim, jersey, tweed, etc.)
Needles size #12/80 needles, suitable for overlock machines (SINGER® Overlock needles #2022)	*Needles* size #14/90 needles, suitable for overlock machines (SINGER® Overlock needles #2022)	*Needles* size #14/90 needles, suitable for overlock machines (SINGER® Overlock needles #2022)
Thread Thread suitable for overlock machines		

Placing the Thread Spools on the Spool Pins

Place the thread spools over the cone holders on the spool pin.

A. If sewing with small thread spools, remove the cone holders. Place the spool with its slit side up, and put the spool cap on top of it.

B. If the thread slips down from the spool during threading and/or sewing, put a net over the spool to avoid thread jams.

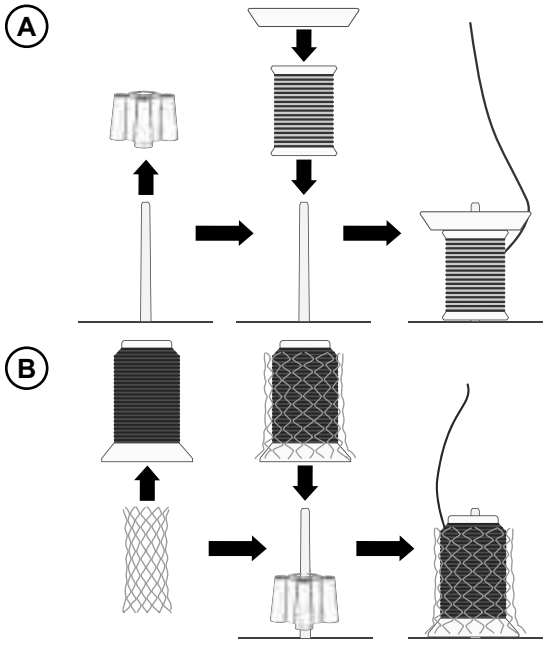

Changing Thread

The following is an easy way to change threads:

1. Cut the thread near the spool, behind the guides on the telescopic thread stand.
2. Remove the thread spool and place the new thread on the spool pin.
3. Tie the end of the new thread to the end of the old thread. Cut the thread tails to 2-3cm (approx. 1") in length and firmly pull both threads to test knot security.
4. Raise the presser foot, to release the thread tension.
5. Pull the threads through the machine one at a time until the knots are in front of the needle. If the threads do not pull easily, check for tangles on thread guides or looping under thread stand.
6. Cut the thread behind the knot and thread the needle.

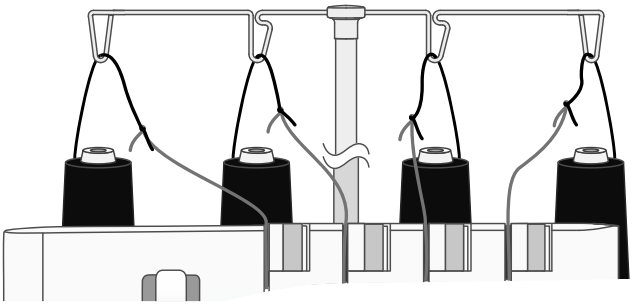

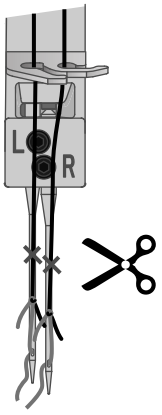

Threading the Upper Looper

(Red)

When threading the upper looper, follow the thread path marked with a red dot.

- Open the front cover. Set the machine in threading position (see page 9). Raise the presser foot.
- Pass the thread from back to front through the thread guide on the thread stand (1). Use the tweezers to make the threading easier.
- Pull the thread from right to left under the pre tension thread guide (2).
- While holding the thread with both hands, pass it between the tension discs and pull it down to make certain it is properly placed between the tension discs (3).
- Thread the looper area of the machine following the red color coded thread guides (4-6). Use the tweezers to make the threading easier.
- Using both hands, place the thread from behind and into the upper looper thread guide (7) and then into the hole in the upper looper (8) from front to back.
- Pull about 10cm (4") of thread through the looper and place it to the back of the needle plate.

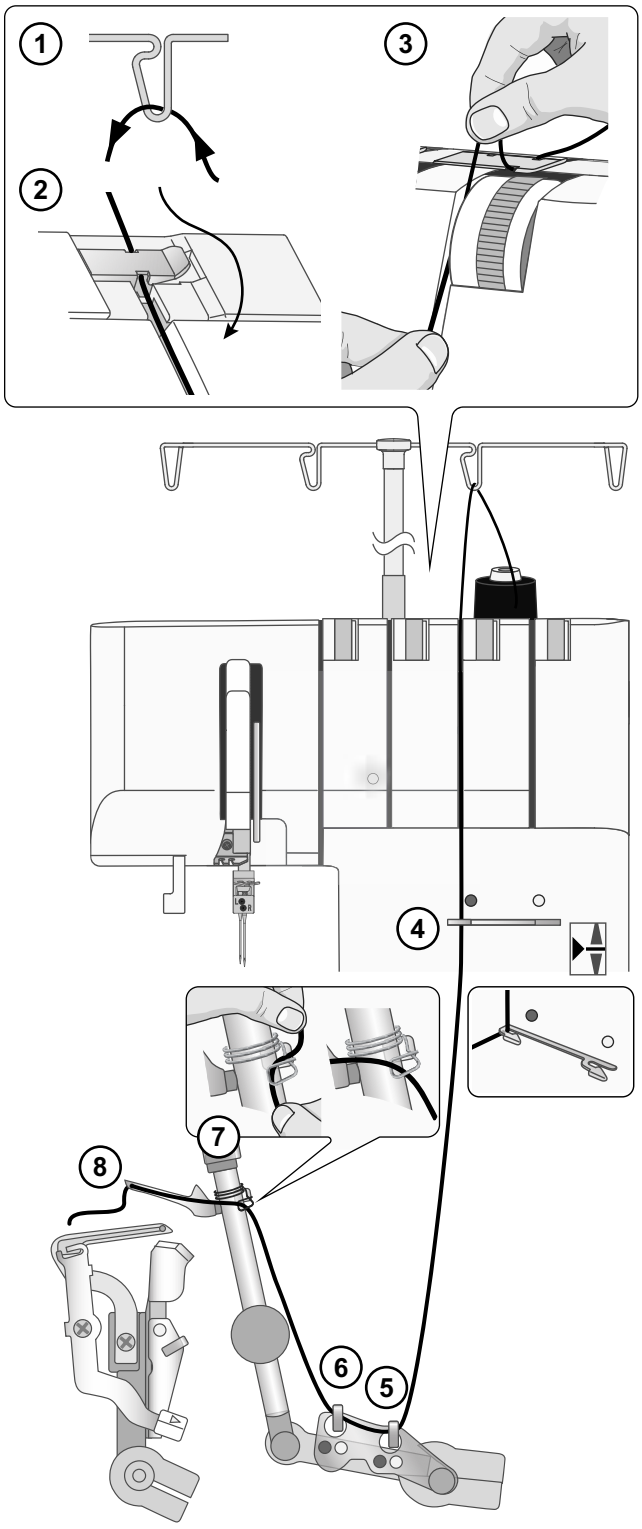

Threading the Lower Looper

(Green)

When threading the lower looper, follow the thread path marked with a green dot.

- Make sure the machine is in threading position (see page 9). Raise the presser foot.
- Pass the thread from back to front through the thread guide on the thread stand (1). Use the tweezers to make the threading easier.
- Pull the thread from right to left under the pre tension thread guide (2).
- While holding the thread with both hands, pass it between the tension discs and pull it down to make certain it is properly placed between the tension discs (3).
- Thread the looper area of the machine following the green color coded thread guides (4-7). Use the tweezers to make the threading easier.
- Push down the lower looper threader, to reveal the last thread guide. Place the thread from left to right into the thread guide (8).

  Push the lower looper threader back to complete the threading.
- After thread guide 8, pass the thread from front to back through the hole in the lower looper (9).
- Pull about 10cm (4″) of thread through the looper and place it over the upper looper and to the back of the needle plate.

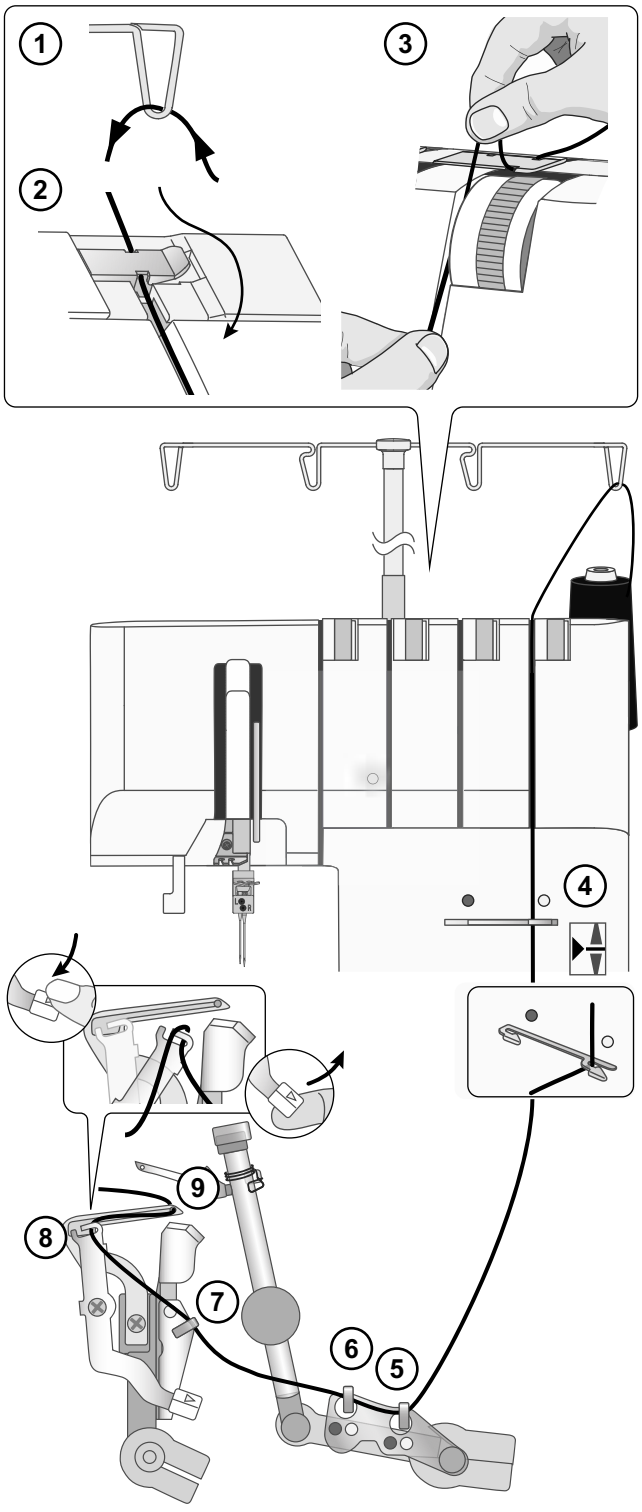

Threading the Right Needle

(Blue)

When threading the right needle, follow the thread path marked with a blue dot.

- Make sure the machine is in threading position (see page 9). Raise the presser foot.
- Pass the thread from back to front through the thread guide on the thread stand (1). Use the tweezers to make the threading easier.
- Pull the thread from right to left under the pre tension thread guide (2).
- While holding the thread with both hands, pass it between the tension discs and pull it down to make certain it is properly placed between the tension discs (3).
- Bring the thread down and under the thread guides (4–5), continue up and around the lower threading path (6). Then place the thread in the right thread guide under the threading paths (7).
- Place the thread in the right needle thread guide (8).
- Thread the eye of the right needle(9). Use the needle threader/tweezers to make needle eye threading easier.
- Pull about 10 cm (4”) of thread through needle eye to hang free.
- Place the thread to the back, under the presser foot.

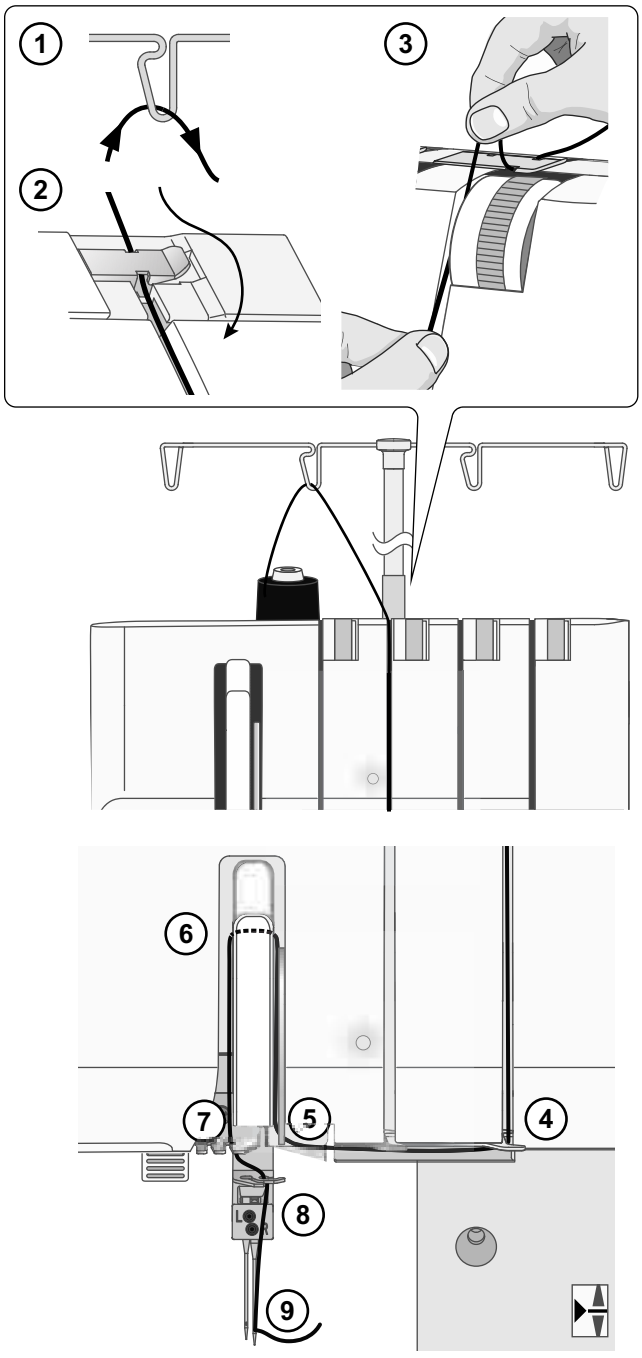

Threading the Left Needle

(Orange)

When threading the left needle, follow the thread path marked with a orange dot.

- Make sure the machine is in threading position (see page 9). Raise the presser foot.
- Pass the thread from back to front through the thread guide on the thread stand (1). Use the tweezers to make the threading easier.
- Pull the thread from right to left under the pre tension thread guide (2).
- While holding the thread with both hands, pass it between the tension discs and pull it down to make certain it is properly placed between the tension discs (3).
- Bring the thread down and under the thread guides (4–5), continue up and around the upper threading path (6). Then place the thread in the left thread guide under the threading paths(7).
- Place the thread in the left needle thread guide (8).
- Thread the eye of the left needle (9). Use the needle threader/tweezers to make needle eye threading easier.
- Pull about 10 cm (4″) of thread through needle eye to hang free.
- Place the thread to the back, under the presser foot.

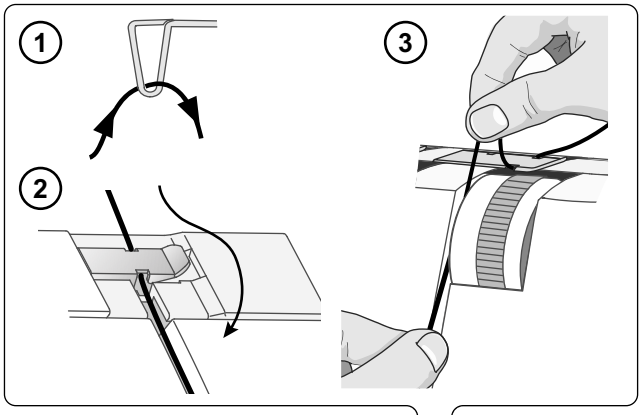

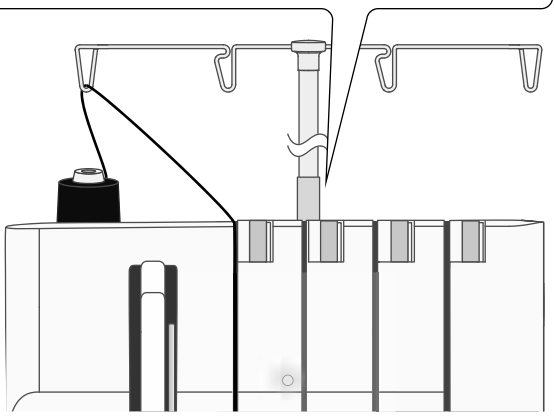

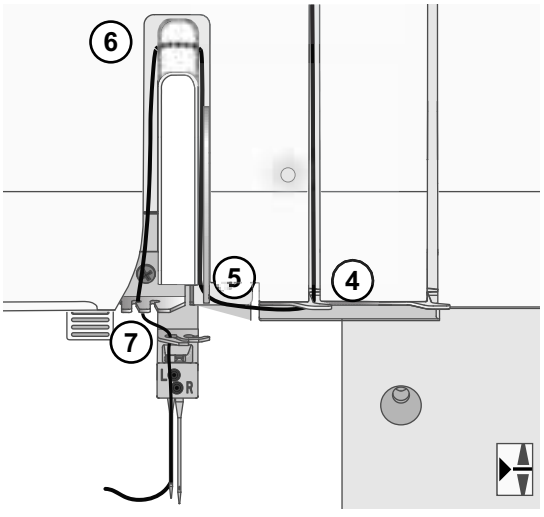

Needle Threader

To make threading the needles easier, use the needle threader included with the accessories.

Turn the handwheel so the needles are in their highest position and lower the presser foot. Make sure the triangular marking on the needle threader is pointing upwards (A). Place the thread from right to left in the notch on the tip of the needle threader (B).

Hold the needle threader against the needle. Move the needle threader down to the needle eye and press gently against the needle, causing a small metal pin to push the thread through the needle eye and form a thread loop (C).

Use the needle threader to pull the thread loop out behind the needle (D).

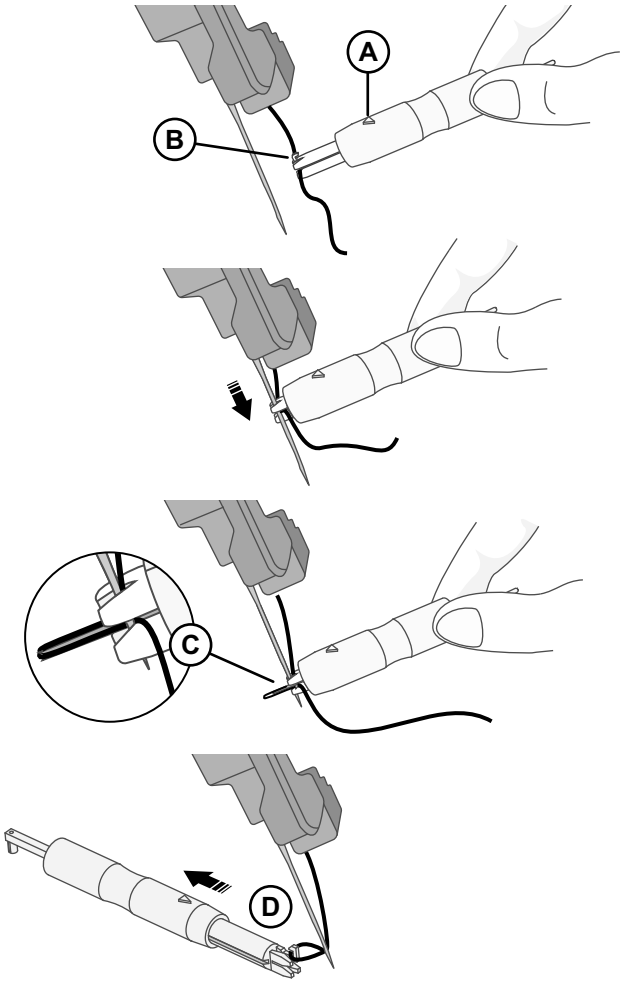

STITCHES AND SEWING TECHNIQUES

Stitch Overview

On your overlock machine, different stitches are obtained by combining different needle positions, threading methods, tension settings, and the use of the upper looper converter.

See Threading, page 12, for references on how to set your machine.

The settings shown in the table below are our recommendations based on normal conditions. It may be necessary to adjust the thread tension depending on the stitch, type of fabric and thread you are using. For best results make tension adjustments in small increments of no greater than half a number at a time. Always test sew on a sample of your fabric before sewing on your project.

Icon Explanation


Needle position


Left needle


Right needle


Differential feed


Stitch length


Cutting width


Stitch finger activated


Upper looper converter


Right needle thread tension


Left needle thread tension


Upper looper thread tension


Lower looper thread tension

4–Thread Overlock

For all seams where stretch or give is needed, such as neck edges, side seams, sleeves, etc.

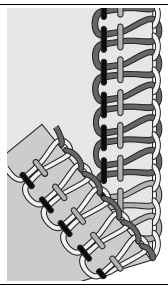

						Thread Tension			
	1–1.5	2.5	5–6		—	4	4	4	4

3–Thread Stretch Overlock

For sewing extra stretchy fabrics. Add additional stretch by using a stretchy type thread in the lower looper. Change the thread tension accordingly.

Note: Not recommended for woven fabrics.

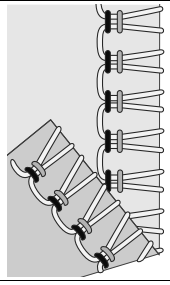

						Thread Tension			
	1–1.5	2.5	6			4.5	4	—	3

3–Thread Overlock, Wide (and Narrow)

For overcasting a single layer of light to medium fabric. Use heavier threads in the loopers to create decorative edges.
Note: Use the right needle instead for a narrow stitch. Recommended thread tension settings within brackets in the chart.

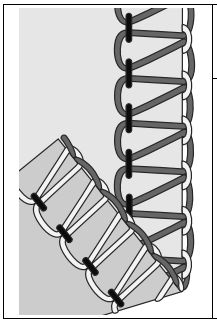							Thread Tension							
	1–1.5	2.5	5–6		—		4	(—)	—	(3.5)	4	(4)	3.5–5	(4–5)

3–Thread Narrow Edge

For edging lightweight fabrics. It gives a nice finish on silky scarves, pillow ruffles and napkins. Thread the upper looper with a decorative thread, such as 40 weight rayon for a beautiful satin edge.
Note: Not recommended for heavy weight fabrics.

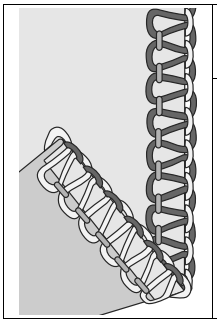							Thread Tension			
	0.7–1	2	7	—	—		—	4	4–5	4

3–Thread Flatlock, Wide (and Narrow)

For sewing fabrics together with a decorative effect either with the flatlock side or the ladder stitch side. Create varying effects by threading the loopers with decorative thread, such as 40 weight rayon.
Note: Use the right needle instead for a narrow stitch. Recommended thread tension settings within brackets in the chart.

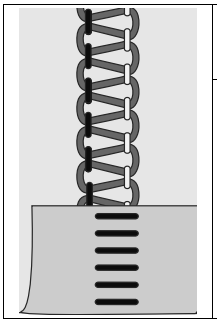							Thread Tension							
	1–1.5	2.5	5–6.5		—		1.5	(—)	—	(1.5)	3.5	(3.5–4)	6–7	(6–7)

3–Thread Rolled Edge

For edging lightweight fabrics. It gives a nice finish on silky scarves, pillow ruffles and napkins. For a beautiful rolled edge, thread the loopers with a decorative lightweight thread, such as 40 weight rayon, for a beautiful satin edge and the needle and lower looper with lightweight regular thread.

Note: Not recommended for heavy weight fabrics.

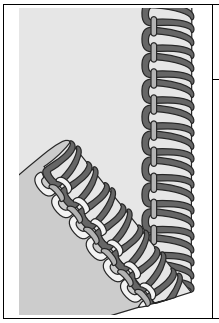							Thread Tension			
	1	1	5–6	—	—	—	3.5	4–5	6–7.5

3–Thread Picot Edge

Increased stitch length will form a picot edge on your fabric. This edge is a nice way to give a decorative finish to wedding or bridesmaid dresses.

Suitable for light and medium weight woven fabrics and light and medium stretch fabrics.

Note: Not recommended for heavyweight woven fabrics or heavyweight stretch fabrics.

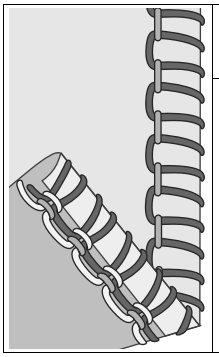							Thread Tension			
	0.7–1	2.5	6	—	—	—	3.5	3.5	6.5

2–Thread Overlock, Wide (and Narrow)

For overcasting a single layer of light to medium weight fabrics (upper looper converter required).

Note: Use the right needle instead for a narrow stitch. Recommended thread tension settings within brackets in the chart.

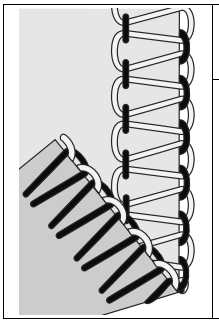							Thread Tension							
	1–1.5	2.5	5–6			1.5–2	(—)	—	(2)	—	(—)	4–4.5	(4)

2–Thread Wrapped Overlock, Wide (and Narrow)

For sewing two layers of stretchy fabrics together. Add additional stretch by using a stretchy type thread in the lower looper. Change the thread tension accordingly.

Note: Not recommended for light, medium, heavy woven fabrics or light stretch fabrics.

Note: Use the right needle instead for a narrow stitch. Recommended cut width and thread tension settings within brackets in the chart.

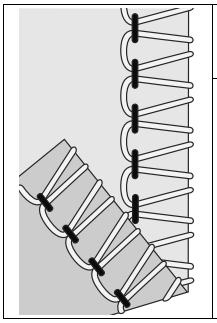

					Thread Tension							
1–1.25	2.5	6			5	(—)	—	(6.5)	—	(—)	3	(3.5)

2–Thread Rolled Edge

For edging lightweight fabrics. It gives a nice finish on silky scarves. Thread the looper with a decorative lightweight thread, such as 40 weight rayon for a beautiful satin edge (upper looper converter required).

Note: Not recommended for medium or heavy weight fabrics.

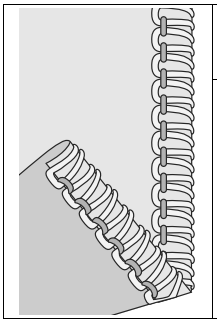

					Thread Tension			
1	1	5	—		—	4	—	4

2–Thread Flatlock Wide (and Narrow)

For sewing stretchy fabrics together with a decorative effect either with the flatlock side or the ladder stitch side. Create varying effects by threading the lower looper with decorative thread (upper looper converter required).

Suitable for all fabrics.

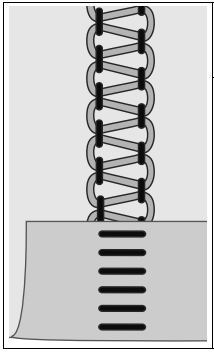

					Thread Tension							
1	2.5	6–6.5			2	(—)	—	(2)	—	(—)	4	(4)

Start Sewing

1. When the machine is completely threaded, close the front cover and bring all of the threads over the needle plate and slightly to the left under the presser foot.

   Ensure that the upper cutter moves against the stationary cutter correctly by turning the handwheel slowly toward you. If the upper cutter does not move correctly, check if there are any fabric or waste thread stuck between the blades.

   Hold the threads and apply a slight tension.

   Turn the handwheel toward you 2 or 3 complete turns to start making a thread chain. Check if all threads wind around the stitch finger of the needle plate. If the threads do not wind around the finger, make sure each thread is threaded correctly.

2. Continue holding the thread chain while pressing the foot control. Sew until the chain is 5-8cm (2″-3″) in length.
3. Place fabric under the front of the presser foot and sew a test sample. Guide the fabric slightly while sewing. Do not pull on the fabric as this may deflect the needle, causing it to break.

   Note: Insert straight pins to the left of the presser foot. The pins will be easy to remove and are away from the cutters.

   Warning: *Sewing over pins will damage and might destroy the edge of the cutters.*

4. When you reach the end of the fabric, continue sewing while drawing the finished fabric gently backwards and to the left. This is called chaining off. It prevents the threads from coming undone and prepares for next sewing.

   Cut off the thread chain 2-5cm (1″-2″) behind the presser foot.

Note: When you stop sewing the needle(s) always stop in the highest position. Adjust the up/down position of the needle(s) by tapping the foot control.

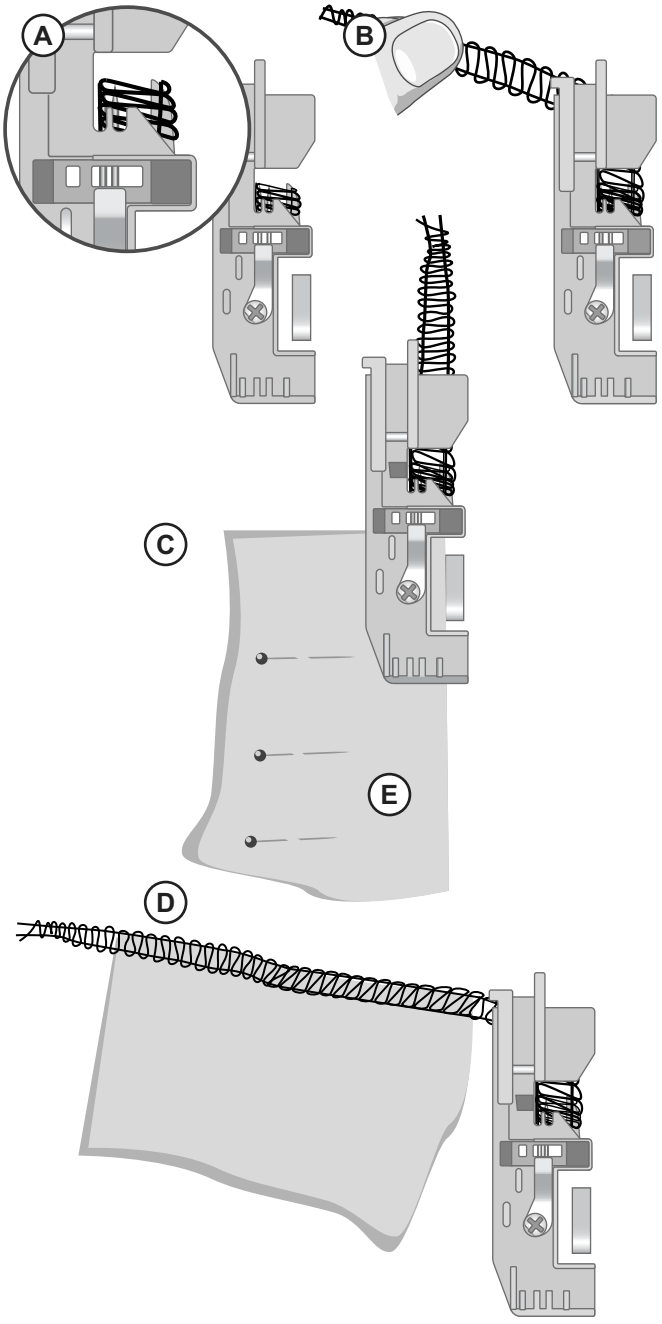

Securing Thread Chain

Tie a Knot

To avoid the thread chain from ravelling, separate and tie the thread ends together.

Use a Sewing Needle

Thread the chain into a large eyed, hand sewing needle.

Insert the needle into the end of the seam and pull the chain into the seam to secure the threads.

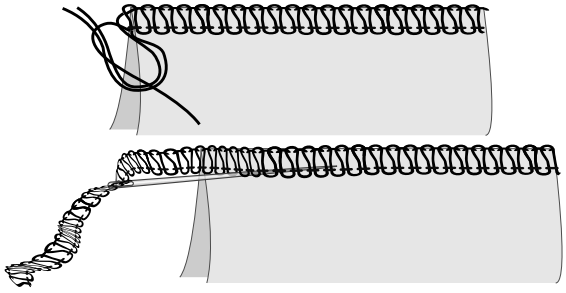

Use the Machine at the Start of a Seam

1. Before placing the fabric in the machine, sew a thread chain approximately 2”-3” (5-8cm) long.

   Place your fabric in front of the presser foot. Sew a few stitches and stop.

2. Raise the presser foot and bring the thread chain to the left around and under the presser foot.

   Place the thread chain between the presser foot and upper knife, holding it in position as you lower the presser foot to sew.

3. After sewing approximately 1” (2.5 cm), move the chain to the right and under the upper knife, cutting the chain as you sew.

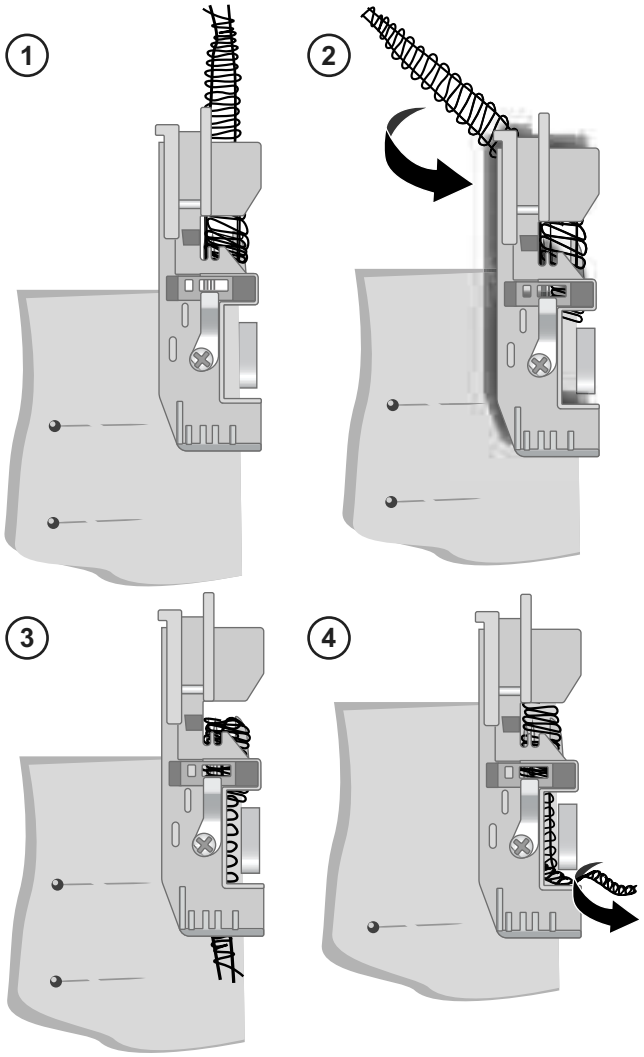

Use the Machine at the End of a Seam

1. Serge one stitch off the end of the seam.

   Raise the needle and presser foot, and gently pull the threads off the stitch finger.
2. Turn the fabric over so that the under side is up.
3. Serge approximately 1″(2.5cm) over the stitching and angle off the fabric.

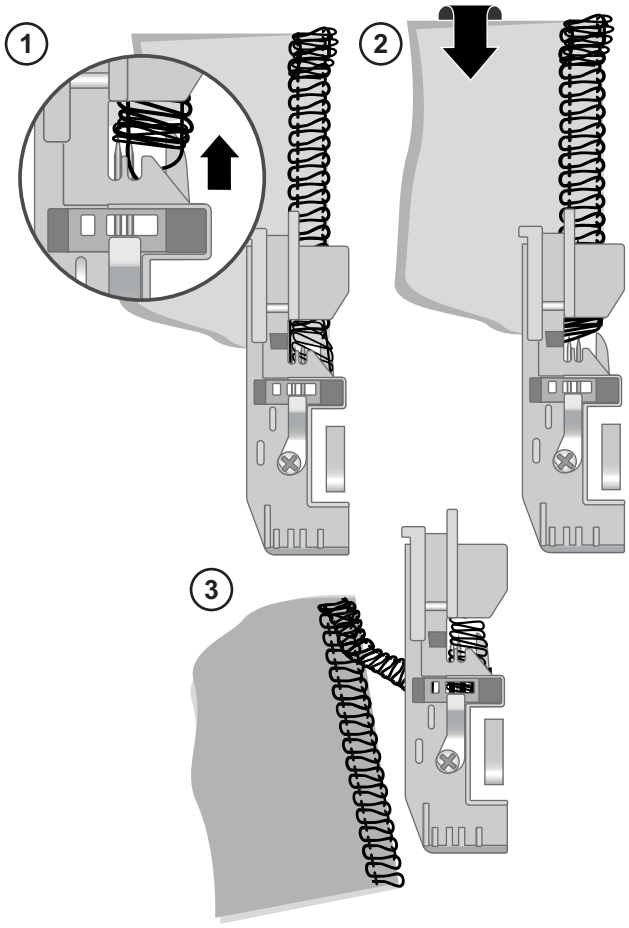

Cutting the Seams Open

Cut the upper looper thread with a seam ripper (not included with the machine) to cut the seams.

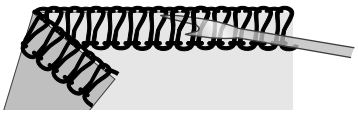

Corded Seams

Corded seams can be used to strengthen stitches when joining elastic fabrics such as knits. Cording prevents knit fabrics from stretching and also stabilizes the seams.

The presser foot is equipped with a guide (A) that can be used for cords and up to 4mm wide ribbons. Use the allen key to carefully slide the guide to the left or right to fit your cord/ribbon. The smaller opening (B) is used for cords and the wider opening (C) is used for different ribbons.

Insert the cord/ribbon into a suitable opening. If needed adjust the opening to fit the ribbon.

Position the cord/ribbon under the presser foot and to the back. The cord/ribbon will be attached in the stitch as the seam is sewn.

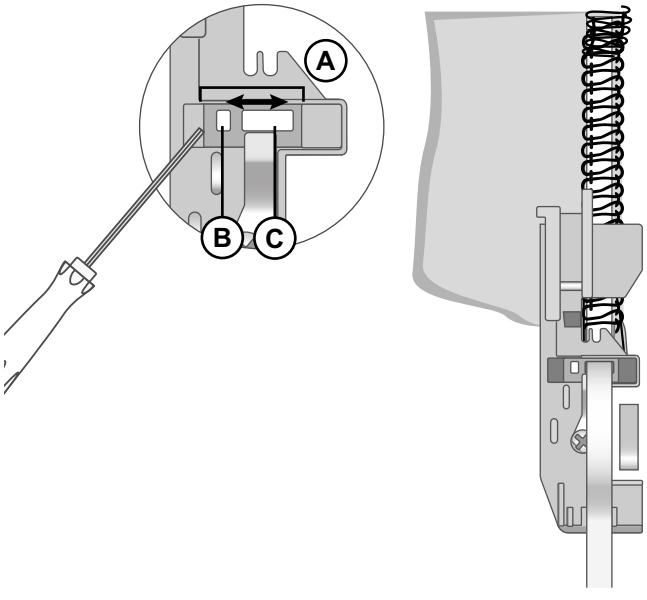

Gathering with Differential Feed

The differential feed can be used to gather lightweight fabrics. Use it for sleeves, making ruffles, and more.

Set the differential feed between 1–2 to obtain the best gathering effect for your project. Always try on a scrap piece of your fabric first. See Differential Feed, page 32, to learn how to adjust the differential feed.

Tip: For even more gathering effect, you could also increase the stitch length and/or increase the needle thread tension.

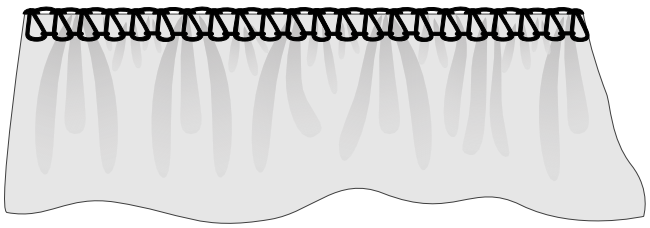

Sewing Corners

Outer Corners

Trim three of the corners approximately 1¼" (3cm) as illustrated (A). Start sewing at the corner that is not trimmed.

When you reach a corner, stop the machine. Raise the needle and the presser foot. Remove the threads from the stitch finger. Turn the fabric and align the cutting line with the upper knife (B).

Lower the presser foot lifter. Continue to sew from where the previous stitches on the corner ended.

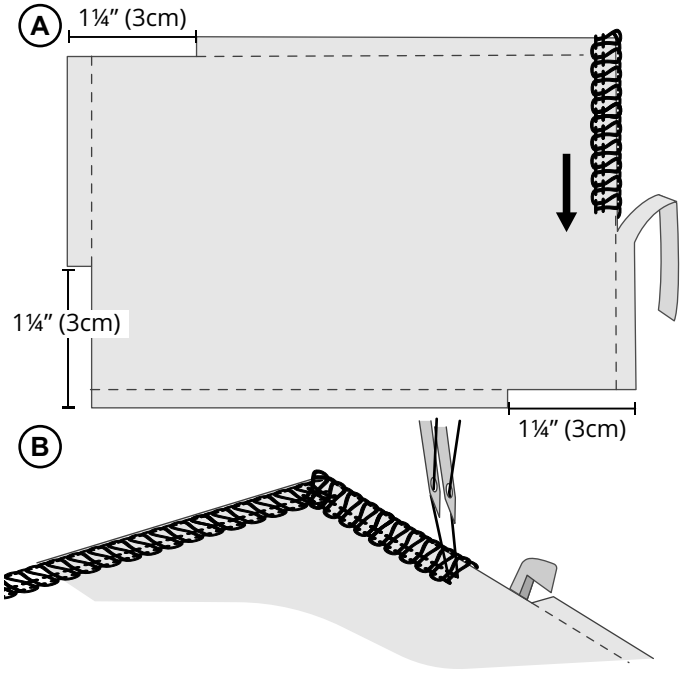

Inner Corners

Cut the inner corner as illustrated (A). Sew and stop approximately 1¼" (3 cm) before the inner corner.

Turn the fabric so that the cutting lines are straight (B).

Continue sewing.

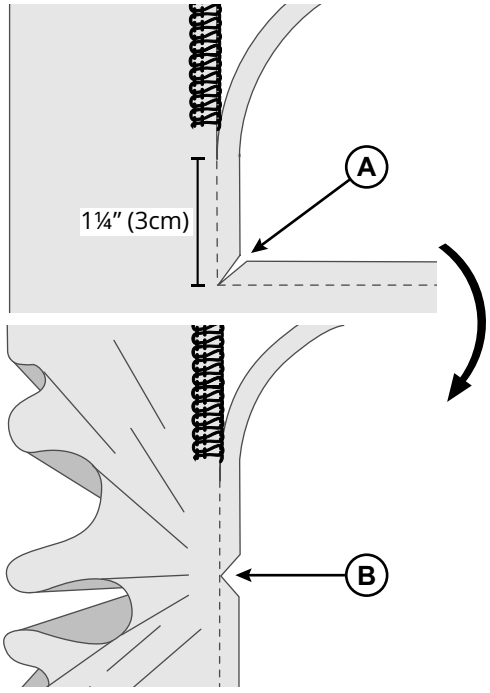

Sewing Heavy Weight Fabric

When sewing in extra heavy weight fabric or in multiple layers of fabric the upper cutter should be secured in its position. If not, the upper cutter could move slightly out of position due to the heavy fabric and the cut edges of the fabric could be uneven. Once the upper cutter is secured, the cut width cannot be adjusted. Before securing the upper cutter, set the cut width according to your preference.

1. *Securing the Upper Cutter*:
   Open the flat bed extension. Use the allen key and turn the upper cutter set screw (A) clockwise to tighten, and secure the upper cutter.
2. To be able to adjust the cutting width, the upper cutter set screw must be loosened again. Turn the set screw approximately a quarter of a turn in a counter clockwise direction.

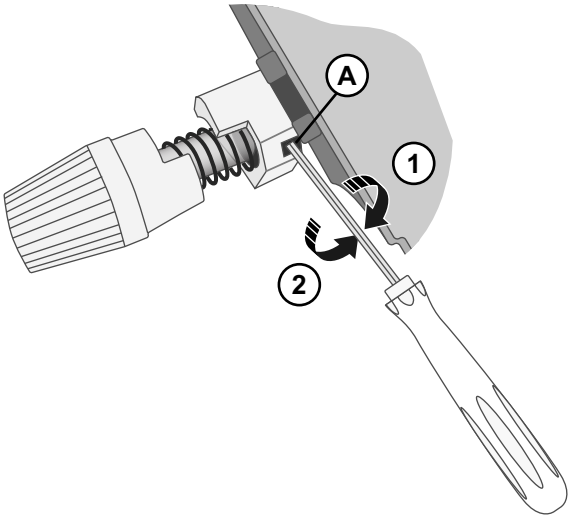

Sewing with Decorative Thread in the Loopers

Heavy decorative threads can be a beautiful highlight to your sewing project. Thread the loopers as described in the threading section (see page 14).

When using decorative threads, remove the spool holder and place the spool caps as shown, to prevent the thread from getting caught on the edge of the spool.

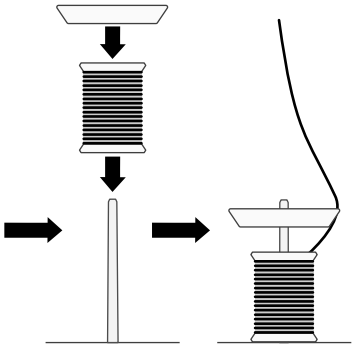

Rolled Edge Sewing

The rolled edge stitch is appropriate for light weight fabrics such as lawn, voile, organdy, crepe, etc. The rolled edge is achieved by adjusting the thread tension to make the fabric edge roll under the fabric while overlocking. Adjust the thread tension to change the degree of rolling. To sew rolled edge you need to deactivate the stitch finger (see page 10).

Tip: For a beautiful rolled edge, thread the upper looper with a decorative thread and the needle and lower looper with lightweight regular thread

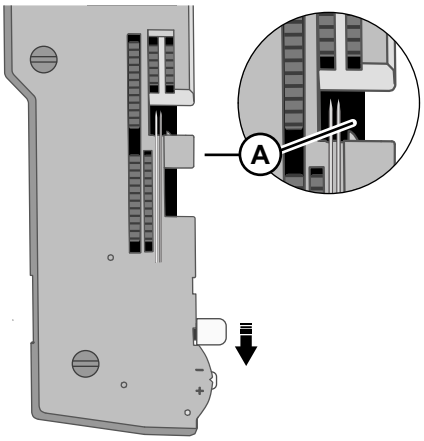

2–Thread Rolled Edge (A)

1. Attach the upper looper converter (see page 9).
2. Use the right needle thread and lower looper thread.
3. Deactivate the stitch finger.
4. Set the stitch length dial to "1" for a fine seam.
5. Set the thread tension according to the stitch table on page 22.
6. Make a thread chain and test sew on a sample of your fabric before sewing on your project. Hold the thread chain while beginning to sew to keep it from curling into the seam.

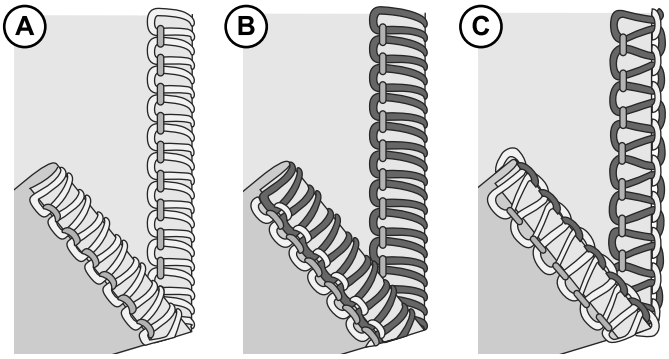

3–Thread Rolled Edge (B) / Narrow Edge (C)

A variant of the rolled edge stitch (B) is the narrow edge (C). It can be obtained by adjusting the thread tension according to "3–Thread Rolled Edge" (page 21) and/or "3–Thread Narrow Edge" (page 20).

1. Use the right needle thread and the upper and lower looper threads.
2. Deactivate the stitch finger.
3. Set the stitch length dial to "1–2" for a fine seam.
4. Set the thread tension according to "3–Thread Rolled Edge" (page 21) or "3–Thread Narrow Edge" (page 20).
5. Make a thread chain and test sew on a sample of your fabric before sewing on your project. Hold the thread chain while beginning to sew to keep it from curling into the seam.

Flatlock Sewing

A Flatlock (A) is made by adjusting the tension of the 2–thread overlock or 3-thread overlock stitch, sewing the seam and pulling the fabrics apart to flatten the seam. The tensions must be adjusted correctly for the fabric to pull flat properly.

A Flatlock can be used both as a decorative construction stitch, sewing two pieces together (Standard Flatlock), or for decoration only on one piece of fabric (Decorative Flatlock).

There are two ways to sew a Flatlock. Either with the wrong sides of the fabric together to create a decorative look, or with the right sides together, to create a Ladder Stitch.

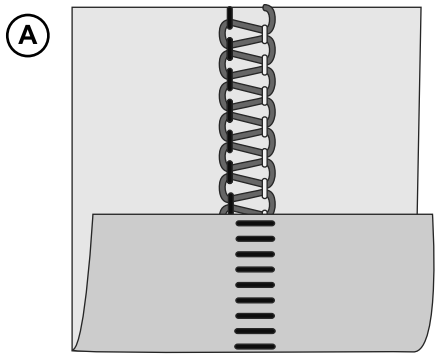

Standard Flatlock, Wide (B)

1. Use the left needle.
2. Thread the lower and upper looper and the left needle.
3. Set the thread tension according to "3–Thread Flatlock, Wide (and Narrow)" on page 20.
4. Place the wrong sides of the two pieces of fabric together to sew a decorative stitch on the right side of the project.
5. Sew the seam, trimming the excess fabric. The needle thread will form a V on the underside of the fabric. The lower looper thread will pull into a straight line at the fabric edge.
6. Unfold the fabric and pull on opposite sides of the seam to pull the stitches flat.

Decorative Flatlock, Wide (C)

1. Deactivate the upper cutter (page 9). The fabric should not be trimmed on this stitch.
2. Follow steps 1-3 above.
3. Fold the fabric piece, wrong sides together, to sew a decorative stitch on the right side of the project.
4. Position the fabric so the seam is sewn with part of the stitch extending off the fabric.
5. Unfold the fabric and pull on opposite sides of the stitch to flatten.

Tip: The upper looper thread is the prominent thread in the flatlock stitch. Place a decorative thread in the upper looper and regular threads in the lower looper and needle.

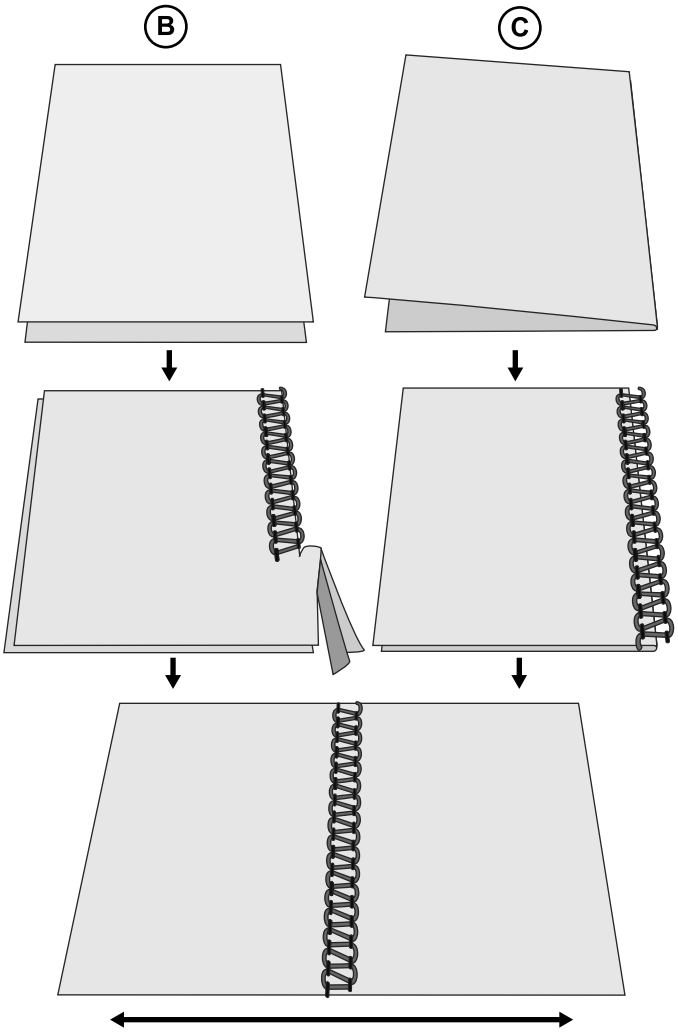

Ladder Stitch (D)

A ladder stitch is a flatlock stitch but sewn with the right sides of the fabric together. The needle thread will be the prominent thread that creates the ladder.

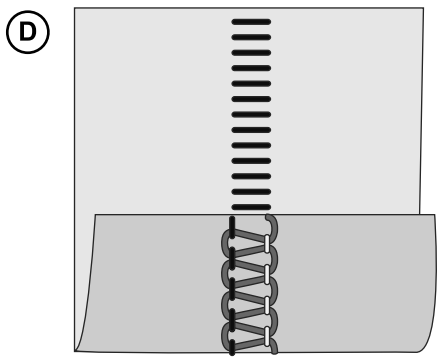

STITCH ADJUSTMENTS

Presser Foot Pressure

The presser foot pressure for sewing based on normal conditions should be set to "3". When sewing in different fabric weights, adjustment might be needed. Generally, decrease the presser foot pressure when sewing in light weight fabric and increase it when sewing in heavy weight fabrics. Always test sew on a sample of your fabric before sewing on your project.

Increase or decrease the pressure in small increments by turning the presser foot pressure screw.

Less pressure: Decrease the pressure by turning the adjustment dial away from you. The lower the number, the less pressure.

More pressure: Increase the pressure by turning the adjustment dial towards you. The higher the number, the higher pressure.

Back to standard setting: Set the presser foot pressure to "3".

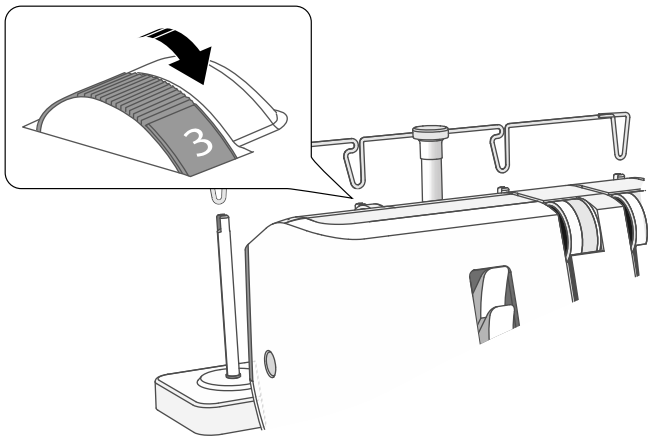

Stitch Width

The stitch width can be increased or decreased by changing the needle position, fine tuning the precise thread control or with the cutting width dial.

Adjustment Using Needle Position

When only the left needle, or when both needles are used the stitch width is 6 mm (A).

When only the right needle is used the stitch width is 4 mm (B).

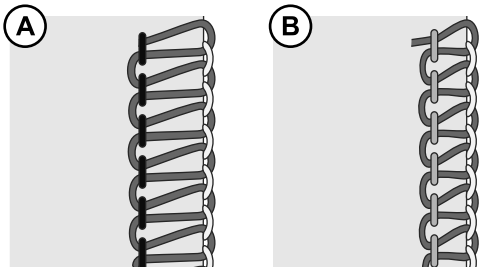

Adjustment Using Cutting Width Dial

The cutting width can be fine tuned by turning the cutting width dial (A). The set value is indicated by the cutting width indicator on the cover (B). By doing so, the upper cutter position and cutting width can be adjusted within the range shown below.

When only the left needle is used: 5 - 9 mm

When only the right needle is used: 3 - 7 mm

For standard setting the dial should be set to 6 (this is indicated by a "dot" marking on the cutting width indicator (B).

Tip: Use the Precise Thread Control system to fine tune the formation of stitches so that the loops form neatly around the fabric edge (see page 31).

Tip: Use wider seams on loosely woven fabrics and more narrow stitches in dense fabric.

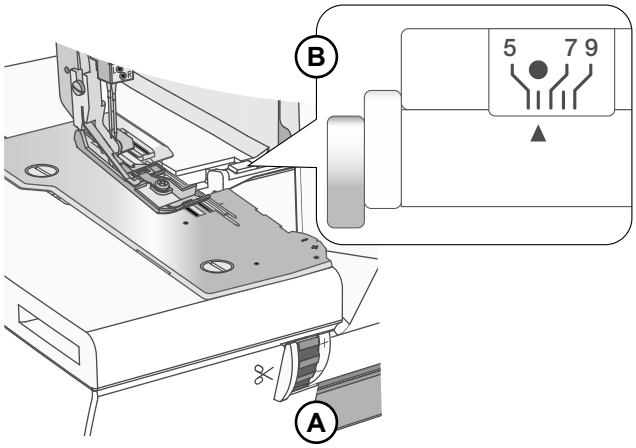

Adjustment Using the Precise Thread Control

If the loops do not form neatly around the fabric edge and you have tried to adjust the tension and/or cutting width, the Precise Thread Control will allow very small movements of the stitch finger to compensate.

A. If the loops extend outside the fabric edge, move the PTC lever towards "–" (1). The stitch finger is moved closer to the needle plate and the loops are formed closer to the fabric edge (2).

B. If the loops are too tight around the fabric edge, causing the fabric to fold or get lumpy along the edge, move the PTC lever towards "+" (1). The stitch finger is moved further away from the needle plate aligning better with the fabric edge (2).

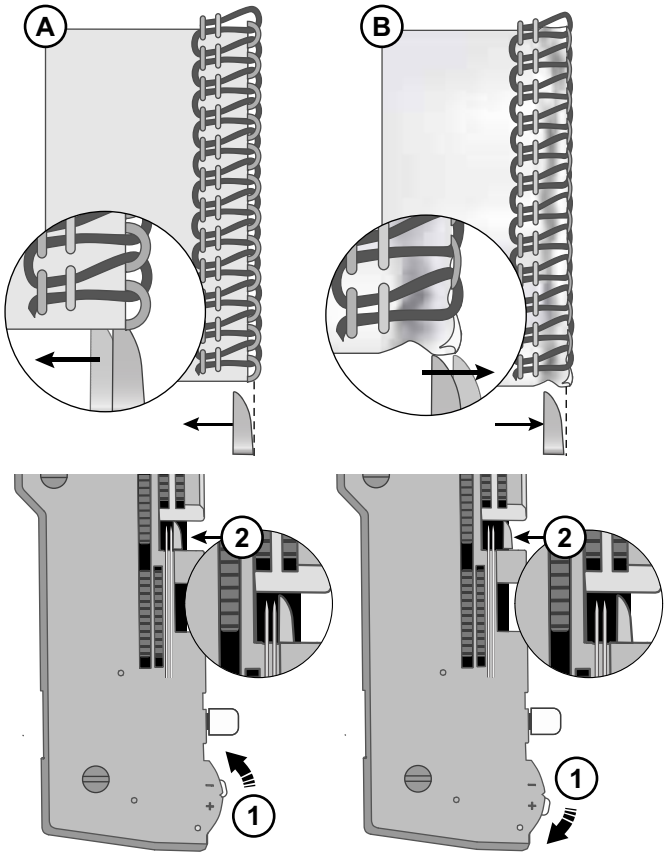

Stitch Length

The stitch length can be adjusted between 0.8mm and 4mm. Stitch length should be set to "2.5" for most sewing conditions, but it may have to be adjusted depending on fabric type. Adjust the stitch length to 3 mm when sewing on heavyweight fabrics. Adjust the stitch length to 2 mm when sewing on lightweight fabrics.

To adjust the stitch length, turn the stitch length dial to the desired value.

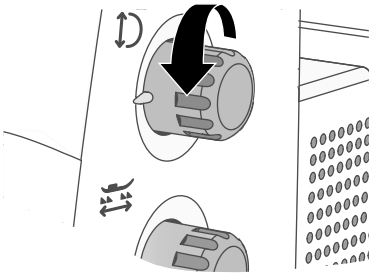

Differential Feed

The differential feed system consists of two sets of feed teeth arranged one behind the other. Both feed teeth work independently of each other to give perfect results when sewing on speciality fabrics. When the amount of feed by the front feed teeth is changed in relation to the feed by the rear feed teeth it will "stretch" or "gather" the fabric.

Use the differential feed to prevent stretching of knit fabrics and puckering of lightweight fabrics.

The differential feed should be set to 1.0 for overlock stitching on normal fabric. To adjust the differential feed, turn the dial.

Normally, the seam and fabric should lay flat (A).

If the sewn fabric stretches (B), adjust the value toward 2.0.

If the sewn fabric is gathered (C), adjust the value toward 0.7.

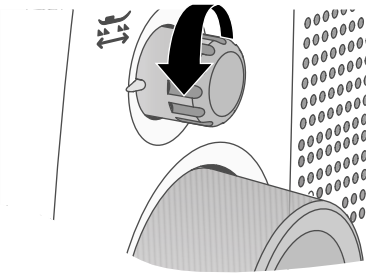

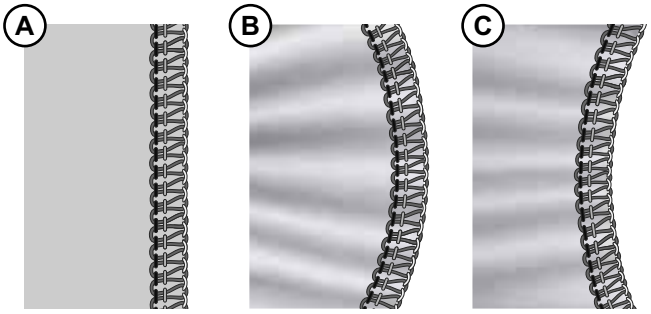

Thread Tension Settings

Thread tension is recommended for each stitch (Stitch Overview, page 19), but it may have to be fine tuned depending on:

- Type and thickness of the fabric
- Needle size
- Size, type and fiber content of the thread

See page 10 for how to adjust the thread tension settings.

The below describes how the tension settings can be adjusted for 4–thread overlock stitch.

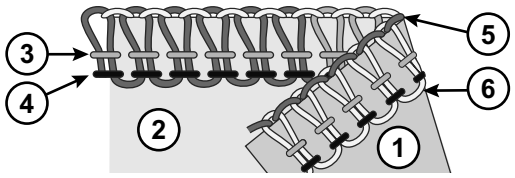

1. Wrong side of fabric
2. Right side of fabric
3. Right needle thread
4. Left needle thread
5. Upper looper thread
6. Lower looper thread

Correct Tension

Lower looper thread and upper looper thread should be well balanced with the same tension (both looper threads should cross at the edge of the fabrics). Needle threads should not be too loose or too tight, but equally balanced tension.

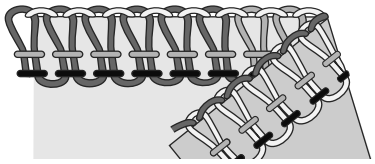

Upper Looper Tension

***When the upper looper thread is too loose (A)*:** Tighten the thread tension of the upper looper or loosen the thread tension of the lower looper.

***When the upper looper thread is too tight (B)*:** Loosen the thread tension of the upper looper or tighten the thread tension of the lower looper.

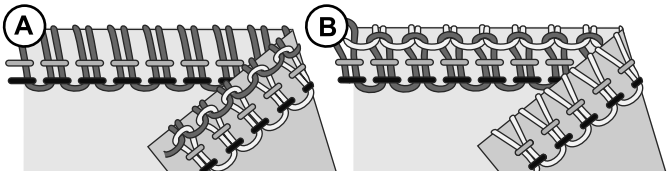

Lower Looper Tension

***When the lower looper thread is too loose (C)*:** Tighten the thread tension of the lower looper or loosen the thread tension of the upper looper.

***When the lower looper thread is too tight (D)*:** Loosen the thread tension of the lower looper or tighten the thread tension of the upper looper.

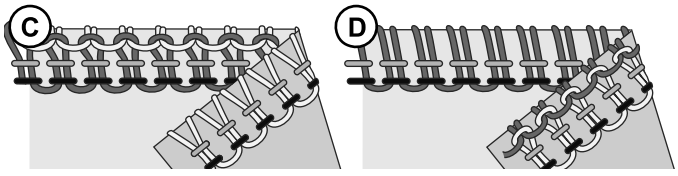

Left Needle Tension

***When the left needle thread is too loose (E)*:** Tighten the thread tension of the left needle or loosen both looper threads.

***When the left needle thread is too tight (F)*:** Loosen the thread tension of the left needle.

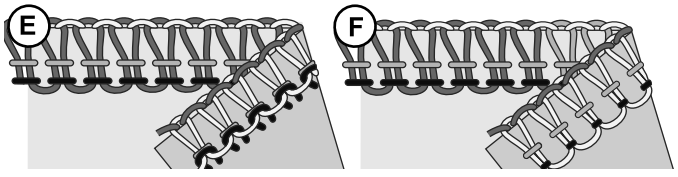

Right Needle Tension

***When the right needle thread is too loose (G)*:** Tighten the thread tension of the right needle.

***When the right needle thread is too tight (H)*:** Loosen the thread tension of the right needle.

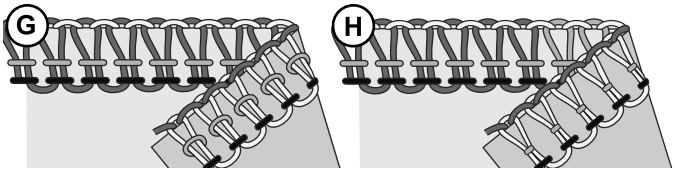

MAINTENANCE

⚠ *Turn off the main power switch and unplug the machine before doing any maintenance.*

Cleaning

An overlock requires more frequent maintenance than a conventional sewing machine since a lot of lint is produced when the cutters are cutting the fabric.

Open the front and flat bed cover.

With a forward brushing movement, use the lint brush to remove any lint.

Loosen the needle plate screws and lift of the needle plate. Use the brush to remove dust and lint. Replace the needle plate and tighten the screws.

Oiling

An overlock runs at a very high speed and needs to be oiled frequently to lubricate the internal working parts. To keep the machine running smoothly and quietly the moving parts must be lubricated often. We recommend lubricating after every 24 hours of use.

Use sewing machine oil. Do not use any other oil, it could damage the machine.

Open the front and flat bed cover. Place a few drops of oil at the locations marked in the illustrations.

When lubricating the upper cutter, it is easier to access the correct spot from the left side of machine (A). You can also access the same location from the right side of the machine (B). The upper looper is lubricated at two locations (C).

Wipe the machine surface to remove all excess oil before sewing.

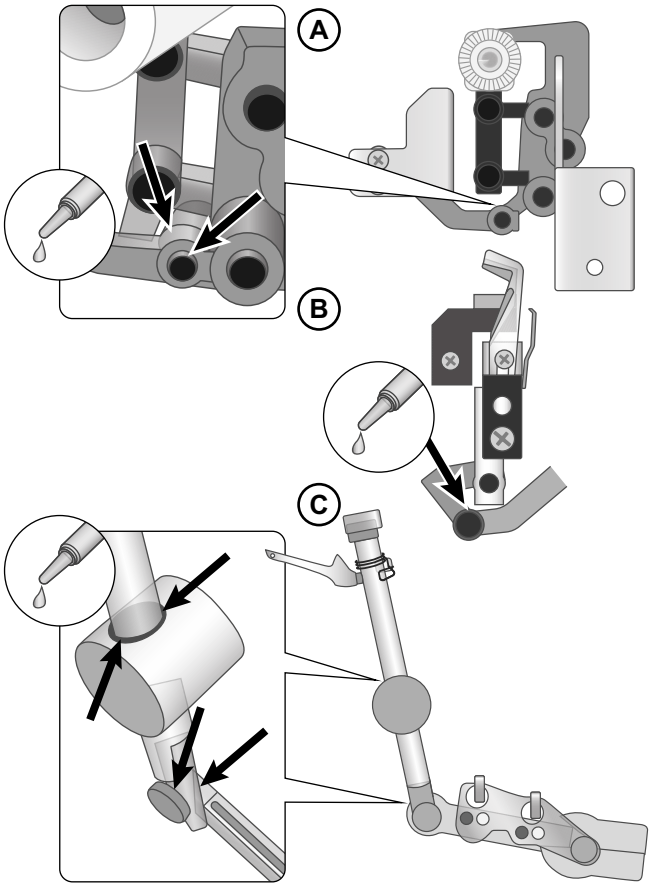

Replacing the Upper Cutter

⚠ *Turn off the main power switch and unplug the machine.*

The upper cutter should be changed when it becomes blunt. Change it by following the below instructions. If you are having any difficulties, consult your service agent to make the necessary adjustments.

- Open the front cover. Place the upper cutter in its lowest position.
- Loosen the upper cutter set screw (A) and remove the upper cutter (B).
- Place a new upper cutter in the groove of the upper cutter holder. The front edge of the upper cutter should be 0.5mm lower than the cutting edge of the needle plate (C).
- Tighten the upper cutter set screw (A).

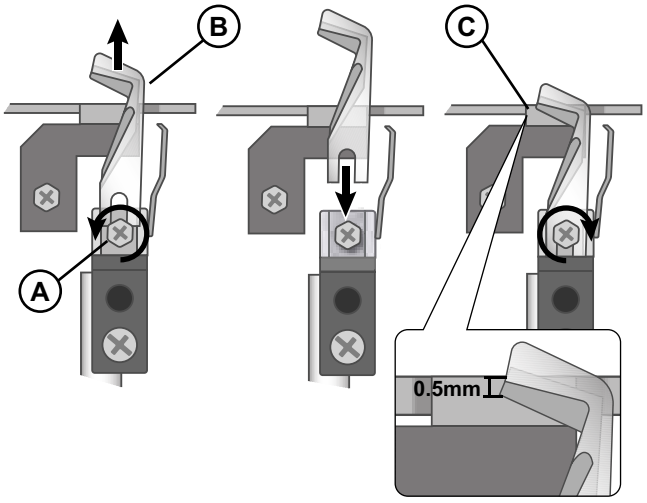

Storage

When the machine is not in use, be sure to keep it unplugged. Cover the machine with the soft dust cover to protect it and store the machine, so it is not exposed to direct sunlight or humidity.

Servicing

If you have any questions regarding service and/or operation, contact our Customer Care department.

Trouble Shooting

The Safety LED Indicator is Lit

Possible Cause:	The front cover and/or the flat bed extension is open.
Solution:	*Close the front cover and/or the flat bed extension.*
Possible Cause:	The presser foot is raised.
Solution:	*Lower the presser foot.*
Possible Cause:	The motor is overloaded.
Solution:	*Switch the machine of for 10–15 minutes to let the motor cool off.*
Possible Cause:	The machine has entered Standby Mode.
Solution:	*Press the foot control, move the presser foot lifter or open any of the covers to restart the machine.*

Machine Does Not Run

Possible Cause:	Machine not properly connected to power source.
Solution:	*Check that machine has been properly connected to power source (page 4).*
Possible Cause:	The front cover and/or the flat bed extension is open.
Solution:	*Close the front cover and/or the flat bed extension.*
Possible Cause:	The presser foot is raised.
Solution:	*Lower the presser foot.*

Fabric Does Not Feed Well

Possible Cause: Stitch length is set too short for the fabric being sewn.

***Solution*:** *Increase the stitch length setting (page 31).*

Possible Cause: Differential feed is not set in the correct position for the fabric being sewn.

***Solution*:** *Adjust the differential feed (page 32).*

Possible Cause: Presser foot pressure not correctly set for fabric being sewn.

***Solution*:** *Adjust presser foot pressure (page 30).*

Needle Breaks

Possible Cause: Needle may not be properly inserted in the needle clamp.

***Solution*:** *Insert needle so that it is all the way up in the needle clamp, then tighten the screw securely (page 7).*

Possible Cause: Manually pulling fabric from behind presser foot while sewing which causes needles to deflect.

***Solution*:** *Refrain from pulling fabric manually; allow feed teeth to draw fabric under presser foot.*

Possible Cause: Needle may not be the correct size for the fabric being sewn.

***Solution*:** *Use a needle size that is compatible for the fabric (page 12).*

Thread Breaks

Possible Cause: Machine may not be threaded correctly; threads threaded in the incorrect sequence.

***Solution*:** *Check that machine is threaded in correct order (page 12).*

Possible Cause: Thread is not unreeling smoothly off the thread spool.

***Solution*:** *Check the thread spool to ensure thread is not getting caught.*

Possible Cause: Needle(s) may have a bent, dull or broken point.

***Solution*:** *Replace needle(s) (page 7).*

Possible Cause: The needle is inserted incorrectly.

***Solution*:** *Insert the needle correctly (page 7).*

Possible Cause: Using thread that is poor quality or has uneven filament.

***Solution*:** *Use good quality thread with a smooth, even filament.*

Possible Cause: Thread tension is set too tight.

***Solution*:** *Loosen thread tension (page 33).*

Possible Cause: Thread is caught in one of the thread guides.

***Solution*:** *Check threading path to ensure all threads are feeding smoothly.*

Stitches Skipping

Possible Cause: Needle(s) may have a bent, dull or broken point.

***Solution*:** *Replace needle(s) (page 7).*

Possible Cause: Needle may not be properly seated in the needle clamp.

***Solution*:** *Insert needle so that it is all the way up in the needle clamp, then tighten the screw securely.*

Possible Cause: Needle may not be the correct size for the fabric being sewn.

***Solution*:** *Use a needle size that is compatible for the fabric (page 12).*

Possible Cause: Machine may not be threaded correctly or threads were threaded in the incorrect sequence.

***Solution*:** *Check that machine is threaded in correct order as shown in machine manual (page 12).*

Possible Cause: Using thread that is poor quality or has uneven filament.

Solution: *Use good quality thread with a smooth, even filament.*

Irregular Stitches

Possible Cause: Stitches are not balanced.

Solution: *Adjust thread tensions and possibly cutting width (page 33/page 30).*

Possible Cause: Thread is not unreeling smoothly off the thread spool.

Solution: *Check the thread spool to ensure thread is not getting caught.*

Possible Cause: Machine may not be threaded correctly or threads threaded in the incorrect sequence.

Solution: *Check that machine is threaded in correct order as shown on (page 12).*

Fabric Puckers

Possible Cause: Thread tensions are set too tightly.

Solution: *Loosen thread tensions (page 33).*

Possible Cause: Thread is not unreeling smoothly off the thread spool.

Solution: *Check the thread spool to ensure thread is not getting caught.*

Possible Cause: Using thread that is poor quality or has uneven filament.

Solution: *Use good quality thread with a smooth, even filament.*

Possible Cause: Stitch length is set too short.

Solution: *Adjust stitch length to a longer setting (page 31).*

Possible Cause: Differential feed is not set in the correct position for the fabric being sewn.

Solution: *Adjust the differential feed (page 32).*

Irregular Trimming

Possible Cause: Upper cutter is not in proper position.

Solution: *Check alignment of the upper and stationary cutter (page 35).*

Possible Cause: Cutter is damaged or worn out.

Solution: *Replace the cutter (page 35).*

Fabric Jams

Possible Cause: Upper cutter is not in proper position.

Solution: *Check alignment of the upper and stationary cutter (page 35).*

Possible Cause: Thread is not unreeling smoothly off the thread spool.

Solution: *Check the thread spool to ensure thread is not getting caught.*

Possible Cause: Too much fabric thickness.

Solution: *Compress thick layers with conventional sewing machine before sewing on your overlock machine.*

Technical Specification

Sewing Speed Maximum 1400 ± 150rpm	**Stitch Length** 0.8–4mm	**Foot Control Type** FR2
Needles SINGER® EL #2022 #90/14	**Stitch Width** 3–9mm	**Presser Foot Rise** 5–7mm
Number of Needles 1–2	**Differential Feed Ratio** 0.7–2.0	**Weight** 9.8kg
Number of Threads 2–4	**Type of Lamp** LED light	**Machine Dimensions** Width: ≈323mm Depth: ≈305mm Height: ≈298mm
Protection Class II (Europe)	**Power Rating** Machine: <194Watt	**Rated Voltage** 240 V/50Hz, 230 V/50Hz, 220 V/50-60Hz, 127 V/60 Hz, 120 V/60 Hz, 100V/50-60Hz

We reserve the right to change the machine equipment and the assortment of accessories without prior notice, or make modifications to the performance or design. Such modifications, however, will always be to the benefit of the user and the product.

INTELLECTUAL PROPERTY

Singer, and the Cameo "S" Design are exclusive trademarks of Singer Sourcing Limited LLC or its Affiliates.



Please note that on disposal, this product must be safely recycled in accordance with relevant National legislation relating to electrical/ electronic products. Do not dispose of electrical appliances as unsorted municipal waste, use separate collection facilities. Contact your local government for information regarding the collection systems available. When replacing old appliances with new ones, the retailer may be legally obligated to take back your old appliance for disposal free of charge.

If electrical appliances are disposed of in landfills or dumps, hazardous substances can leak into the groundwater and get into the food chain, damaging your health and well-being.





Importer to the UK:
VSM UK
Ravensbank House, Ravensbank Drive
North Moons Moat, Redditch. B98 9NA, United Kingdom

Manufacturer
VSM GROUP AB, **SVP Worldwide**
Soldattorpsgatan 3
SE-55474, Jonkoping, SWEDEN

SINGER®

ORIGINAL SINCE 1851.

4711382-26F · English · © 2026 Singer Sourcing Limited LLC or its Affiliates. · All rights reserved